OPERATING AND SERVICE MANUAL

MODEL 1331A X-Y DISPLAY

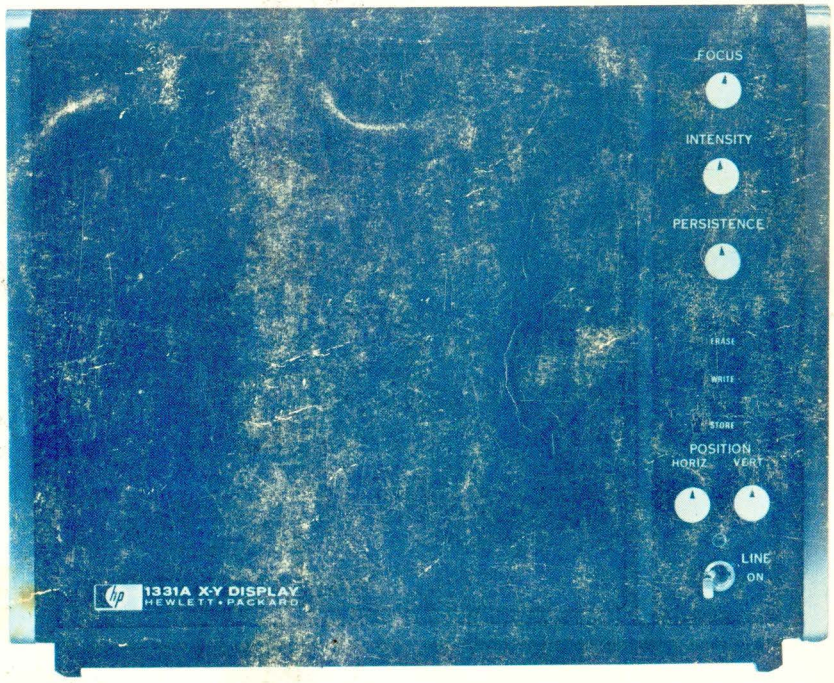

HEWLETT hp PACKARD

CERTIFICATION

The Hewlett-Packard Company certifies that this instrument was thoroughly tested and inspected and found to meet its published specifications when it was shipped from the factory. The Hewlett-Packard Company further certifies that its calibration measurements are traceable to the U.S. National Bureau of Standards to the extent allowed by the Bureau's calibration facility.

WARRANTY AND ASSISTANCE

This Hewlett-Packard product is warranted against defects in materials and workmanship. This warranty applies for one year from the date of delivery, or, in the case of certain major components listed in the operating manual, for the specified period. We will repair or replace products which prove to be defective during the warranty period provided they are returned to Hewlett-Packard. No other warranty is expressed or implied. We are not liable for consequential damages.

Service contracts or customer assistance agreements are available for Hewlett-Packard products that require maintenance and repair on-site.

For any assistance, contact your nearest Hewlett-Packard Sales and Service Office. Addresses are provided at the back of this manual.

OPERATING AND SERVICE MANUAL

MODEL 1331A
X-Y DISPLAY

SERIALS PREFIXED: 1319A

Refer to Section VII for instruments with other Serial Prefixes.

Refer to Section VII for instruments with the following standard options: X95, 631.

HEWLETT-PACKARD COMPANY/COLORADO SPRINGS DIVISION
1900 GARDEN OF THE GODS ROAD, COLORADO SPRINGS, COLORADO, U.S.A.

Manual Part Number 01331-90903.
Microfiche Part Number 01331-90803.

PRINTED: MAY 1973

TABLE OF CONTENTS

Section		Page
I	GENERAL INFORMATION	1-1
1-1.	Introduction	1-1
1-4.	Description	1-1
1-10.	Cathode-ray Tube	1-1
1-12.	Warranty	1-1
1-14.	Available Accessories	1-1
1-16.	Instrument and Manual Identification	1-1
1-20.	Inquiries	1-3
II	INSTALLATION	2-1
2-1.	Introduction	2-1
2-3.	Initial Inspection	2-1
2-5.	Preparation for Use	2-1
2-7.	Rack Mounting	2-1
2-9.	Power Requirements	2-1
2-11.	Power Connections	2-1
2-13.	Instrument Cooling	2-1
2-17.	Monitored Inputs	2-1
2-19.	Amplifier Input Modifications	2-2
2-34.	Claims	2-5
2-36.	Repacking for Shipment	2-5
III	OPERATION	3-1
3-1.	Introduction	3-1
3-3.	Controls and Connectors	3-1
3-5.	Beam Find	3-1
3-7.	Intensity	3-1
3-9.	Applications	3-2
3-11.	Preoperational Adjustments and Operator's Checks	3-2
3-13.	Operator's Maintenance	3-2
3-15.	Operating Procedures	3-2
IV	PRINCIPLES OF OPERATION	4-1
4-1.	Introduction	4-1
4-3.	Variable Persistence and Storage	4-1
4-5.	The Storage CRT	4-1
4-10.	Secondary Emission Ratio	4-1
4-12.	Erase Cycle	4-1
4-15.	Variable Persistence	4-2
4-19.	Storage	4-2
4-21.	Storage Precautions	4-2
4-23.	Block Diagram Discussion	4-2
4-25.	Low Voltage Power Supplies	4-2
4-27.	High Voltage Power Supply	4-2
4-29.	X- and Y-axis Amplifiers	4-2
4-31.	Z-axis Amplifier	4-3
4-33.	Intensity Gate	4-3
4-35.	Control Circuits	4-3
4-37.	Pulse Circuits	4-3
4-54.	Detailed Circuit Theory	4-4
4-56.	Low Voltage Power Supplies	4-4
4-64.	High Voltage Power Supply	4-5
4-71.	X- and Y-axis Amplifiers	4-5
4-76.	Z-axis Amplifier	4-5
4-78.	Control Circuits	4-5
4-82.	Pulse Circuits	4-6
V	PERFORMANCE CHECKS AND ADJUSTMENTS	5-1
5-1.	Introduction	5-1
5-5.	Performance Check	5-1
5-8.	Mode and Erase Checks	5-2
5-12.	Deflection Checks	5-2
5-16.	Phase Shift Check	5-2
5-20.	Common Mode Rejection Ratio (CMRR) Check	5-2
5-24.	Bandwidth Checks	5-3
5-28.	Z-axis Amplifier Checks	5-3
5-32.	Erase Time Check	5-4
5-36.	Dot Writing Time Check	5-4
5-40.	Store Time Check	5-5/5-6
5-44.	Adjustment	5-7
5-47.	Low Voltage Power Supply Adjustments	5-7
5-51.	High Voltage Power Supply Adjustment	5-7
5-55.	Write Depth Adjustment	5-7
5-59.	Flood Gun and Collimator Adjustments	5-8
5-63.	Write Gun Intensity Limit Adjustment	5-8
5-67.	X- and Y-axis Amplifier Gain Adjustment	5-8
5-71.	Phase Shift Adjustment	5-8
5-75.	Writing Rate Adjustment	5-9
5-79.	Store Time Adjustment	5-9
5-83.	Z-axis Amplifier Risetime Adjustment	5-10
5-87.	Calibrating Modified Instruments	5-10
5-89.	Phase Shift	5-10
5-91.	Attenuator Compensation	5-10
5-93.	Input Signal Amplitudes	5-11

TABLE OF CONTENTS (Cont'd)

Section		Page
VI	REPLACEABLE PARTS	6-1
6-1.	Introduction	6-1
6-3.	Ordering Information	6-1
VII	MANUAL CHANGES AND OPTIONS	7-1/7-2
7-1.	Introduction	7-1/7-2
7-3.	Manual Changes	7-1/7-2
7-7.	Special Options	7-1/7-2
7-11.	Standard Options	7-1/7-2
VIII	SCHEMATICS AND TROUBLE-SHOOTING	8-1
8-1.	Introduction	8-1
8-3.	Schematics	8-1
8-8.	Reference Designations	8-1
8-12.	Component Locations	8-1
8-15.	Preventive Maintenance	8-1
8-17.	Mechanical Inspection	8-1
8-20.	Cleaning	8-1
8-23.	Switch Maintenance	8-2
8-25.	Repair and Replacement	8-2
8-27.	CRT Removal and Installation	8-2
8-30.	Semiconductor Removal and Replacement	8-3
8-32.	Circuit Boards	8-3
8-34.	Board Connections	8-3
8-36.	Servicing Etched Circuit Boards	8-3
8-38.	Heat Sinks	8-3
8-40.	Troubleshooting	8-3
8-43.	DC Voltages	8-3
8-45.	Waveforms	8-3
8-47.	Trouble Isolation	8-3

LIST OF ILLUSTRATIONS

Figure	Title	Page
1-1.	Model 1331A X-Y Display	1-0
1-2.	Instrument Serial Number	1-3
2-1.	Rack Mounting	2-1
2-2.	Ventilation Tolerances	2-2
2-3.	X-Y Amplifiers Input Circuit	2-4
2-4.	Attenuator Components Locations on Main Board A5	2-4
3-1.	Model 1331A Controls and Connectors	3-3
3-2.	Preoperational Procedure	3-4
3-3.	General Operating Procedure	3-5
3-4.	Multiple Display Procedure	3-6
4-1.	CRT Schematic	4-3
4-2.	Secondary Emission Ratio	4-3
4-3.	Erase Cycle	4-3
4-4.	Variable Persistence Pulsing	4-3
4-5.	Pulse Circuits Block Diagram	4-5
4-6.	Overall Block Diagram	4-7/4-8
5-1.	Phase Shift Trace	5-3
5-2.	Erase Waveform	5-4
5-3.	Write Depth Waveform	5-7
5-4.	Adjustment Locator	5-11/5-12
8-1.	A1 Component Locator	8-4
8-2.	A2 Component Locator	8-5
8-3.	Schematic, ±50V Power Supplies	8-5
8-4.	Semiconductor Terminal Identification	8-7
8-5.	Schematic, +158V and +12.6V Power Supplies	8-7
8-6.	A3 Component Locator	8-8
8-7.	A4 Component Locator	8-8
8-8.	A7 Component Locator	8-8
8-9.	Schematic 3 Measurement Conditions and Waveforms	8-9/8-10
8-10.	Schematic, High Voltage Power Supply	8-9/8-10
8-11.	Schematic 4 Measurement Conditions and Waveforms	8-11/8-12
8-12.	Schematic, X- and Y-axis Amplifiers	8-11-8-12
8-13.	Schematic 5 Measurement Conditions and Waveforms	8-13
8-14.	Schematic, Z-axis Amplifier	8-13
8-15.	A6 Component Locator	8-14
8-16.	A8 Component Locator	8-15
8-17.	Schematic, Control Circuits	8-15
8-18.	A5 Component Locator	8-16
8-19.	Schematic, Pulse Circuits	8-17/8-18
8-20.	Write Mode Troubleshooting Guide	8-19/8-20
8-21.	Store Mode Troubleshooting Guide	8-21/8-22
8-22.	Erase Function Troubleshooting Guide	8-23

LIST OF TABLES

Table	Title	Page
1-1.	Specifications	1-2
1-2.	Accessories	1-3
1-3.	Reference Designations and Abbreviations	1-3
2-1.	X-Y Attenuator Component Values	2-3
2-2.	Attenuator Components Parts List	2-3
2-3.	Z-attenuator Component Values	2-3
3-1.	Definitions	3-1
5-1.	Recommended Test Equipment	5-1
	Performance Check Record	5-6a/5-6b
5-2.	Low Voltage Power Supply Adjustments	5-7
6-1.	Abbreviations for Replaceable Parts List	6-1
6-2.	Replaceable Parts	6-2
6-3.	List of Manufacturer's Codes	6-11/6-12
8-1.	Schematic Notes	8-6

1331A-A-7

Figure 1-1. Model 1331A X-Y Display

SECTION I

GENERAL INFORMATION

1-1. INTRODUCTION.

1-2. This manual provides operating and servicing information for the Hewlett-Packard Model 1331A X-Y Display (figure 1-1). The manual is divided into eight sections, each covering a specific topic or aspect of the instrument. All schematics are located at the rear of the manual and can be unfolded and used for reference while reading any part of the manual.

1-3. This section contains a description of Model 1331A. The instrument specifications are listed in table 1-1. Table 1-3 lists and describes the abbreviations used everywhere in this manual except in Section VI. The parts list in Section VI is a computer printout and uses computer-supplied abbreviations. Special accessories are listed in this section. Standard options available for this instrument are listed and described in Section VII.

1-4. DESCRIPTION.

1-5. Model 1331A has been designed for general-purpose X-Y storage and system monitoring. It can display digital or analog computer-processed data or real time information. Its high frequency response makes it useful as a read-out device in the following applications: graphic and alphanumeric displays, nuclear spectrometer, semiconductor curve tracer, swept-frequency measurements, frequency ratios, phase shift measurements, raster displays, and amplitude versus time displays.

1-6. Identical X and Y amplifiers provide storage monitor displays with bandwidths up to 1 MHz. Refresh memory requirements are minimized by the mesh type storage CRT.

1-7. All controls required to compensate for spot deflection and dot writing speed are located on the front panel. These include FOCUS, INTENSITY, PERSISTENCE, mode (WRITE, and STORE), POSITION controls, and ERASE.

1-8. Model 1331A writes and stores shades of gray which adds a third dimension to the display. Spot blanking is obtained with —1V. Maximum brightness is obtained with +1V. In-between voltages provide shades of gray.

1-9. Model 1331A is proportioned to permit mounting two instruments (any HP 1330/1331-series instruments) side-by-side in a standard 19-inch rack. Refer to the paragraph on available accessories in this section for a description of a suitable rack adapter.

1-10. CATHODE-RAY TUBE.

1-11. Model 1331A uses a post-accelerator storage CRT with a 10.5 kV accelerating potential and aluminized P31 phosphor. The 8 x 10 division internal graticule is located on the same plane as the display to eliminate parallax errors. The mesh type storage used eliminates the need for memory devices to constantly refresh the display. Refer to table 1-1 for complete CRT specifications.

1-12. WARRANTY.

1-13. The instrument (except the CRT) is certified and warranted as stated on the inside front cover of this manual. The CRT is covered by a separate warranty. The CRT warranty and warranty claim form is located at the rear of this manual. Should the CRT fail within the time specified on the CRT warranty page, complete the warranty claim form and return it with the defective CRT. The procedure for returning a defective CRT is described on the CRT warranty page.

CAUTION

The warranty may be void for instruments having a mutilated serial number tag.

1-14. AVAILABLE ACCESSORIES.

1-15. Accessories available for use with Model 1331A are listed in table 1-2. Hewlett-Packard also has a wide range of test equipment and accessories suitable for use with HP instruments and instruments of other manufacturers. Refer to the latest HP Catalog or request information from the nearest HP Sales/Service Office.

1-16. INSTRUMENT AND MANUAL IDENTIFICATION.

1-17. This manual applies directly to Model 1331 instruments with a serial prefix number as listed on the manual title page. The serial prefix number is the first group of digits in the instrument serial number (figure 1-2). The instrument serial number is on a tag located on the rear panel.

Table 1-1. Specifications

VERTICAL AND HORIZONTAL AMPLIFIERS

BANDWIDTH: dc to 1 MHz (3 dB down at 1 MHz).
PHASE SHIFT: <1° to 0.5 MHz.
SETTLING TIME: Signal settles to within 1 spot diameter of final value in <1 μsec for any on-screen movement.
DEFLECTION FACTOR
Vertical: 1V for 8 div deflection. Internally adjustable from 0.09 V/div to 0.14 V/div.
Horizontal: 1V for 10 div deflection. Internally adjustable from 0.09 V/div to 0.14 V/div.
COMMON MODE REJECTION RATIO: 40 dB to 10 kHz for differential input of 3V maximum between outer and inner coaxial input leads.
MAXIMUM INPUT: ±50V (dc + peak ac).
INPUT: differential between center conductor and shield, shield may be grounded with internal connection.
INPUT RC
Single Ended: 100k ohms shunted by approx 80 pF to ground.
Differential: 200k ohms shunted by approx 80 pF.
RECOMMENDED SOURCE IMPEDANCE: <20k ohms between center conductor and shield; <1k ohm from shield to ground.

Z AXIS AMPLIFIER

BANDWIDTH: dc to >5 MHz; risetime, approx 70 ns.
INPUT RC
Single Ended: 10k ohms shunted by approx 60 pF to ground.
Differential: 20k ohms shunted by approx 60 pF.
INPUT: —1V blanks spot of any intensity; +1V turns beam full on.
MAXIMUM INPUT: ±10V (dc + peak ac).
RECOMMENDED SOURCE IMPEDANCE: <20k ohms between center conductor and shield; <1k ohm from shield to ground.

CATHODE-RAY TUBE AND CONTROLS

TYPE: post-accelerator storage tube 7.5 kV accelerating potential, aluminized P31 phosphor.
GRATICULE: 8 x 10 div internal graticule. 1 div = 0.95 cm. Subdivisions of 0.2 div marked on major axis.
WRITING SPEED: >20 div/ms.
DOT WRITING TIME: <4 μsec.
DISPLAY LINEARITY
Horizontal: <5% difference between any two div.
Vertical: <5% difference between any two div.
INFORMATION STORAGE RATE: 200 thousand dots per second.
BRIGHTNESS: >100 foot lamberts.
STORAGE TIME
Writing Mode: 1 minute min.
Store Mode: 15 minutes min.
VARIABLE PERSISTENCE: variable from 0.2 sec to 1 min.
ERASE TIME: <1 sec.
BEAM FINDER: returns beam to screen regardless of setting of X and Y position controls. Rear panel switch.

GENERAL

POWER: 115V or 230V ±10%, 48 to 440 Hz, approx 60 W.
WEIGHT: net, 19-1/2 lb (8,85 kg); shipping, 25 lb (11,34 kg).
DIMENSIONS: Refer to outline drawing.

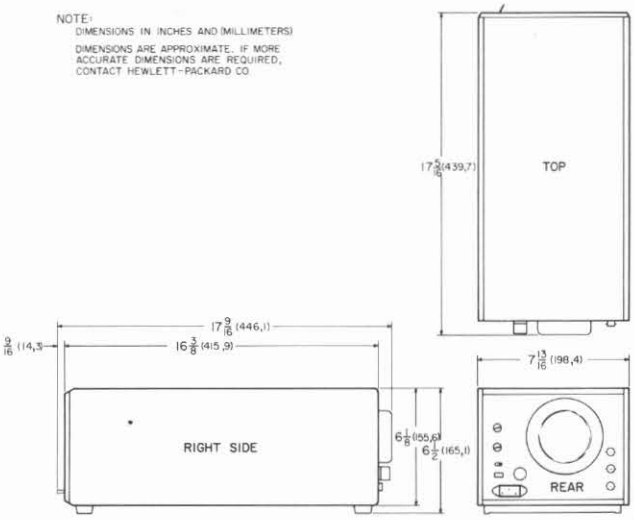

1-18. Check the serial prefix number of the instrument. If the serial prefix number is different from that listed on the title page of this manual, refer to Section VII for instructions to adapt this manual for proper instrument coverage.

1-19. Errors in the manual are listed under errata on an enclosed MANUAL CHANGES sheet (if any).

1-20. INQUIRIES.

1-21. Refer any questions regarding the manual, the change sheet, or the instrument to the nearest HP Sales/Service Office. Always identify the instrument by model number, complete name, and complete serial number in all correspondence. Refer to the inside rear cover of this manual for a world-wide listing of HP Sales/Service Offices.

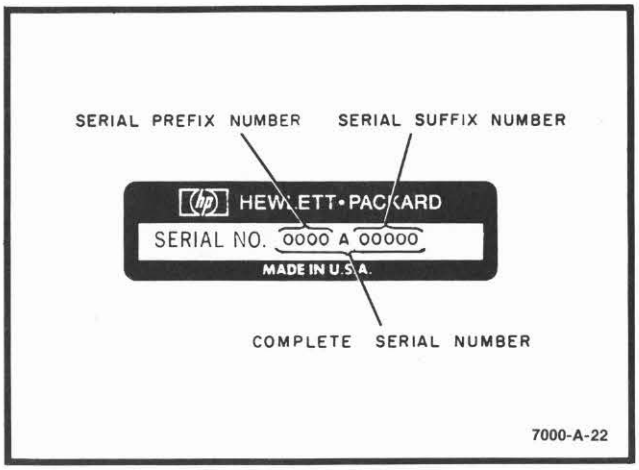

Figure 1-2. Instrument Serial Number

Table 1-2. Accessories

CAMERA ADAPTER: Model 10366B adapter provides mounting of a HP Model 195A, 197A, or 198A camera.

DISPLAY CABLE, MODEL 10488A: provides interconnection between the display and the signal input source. The cable has three color-coded coaxial cables with three male BNC connectors on each end for the x, y, and z inputs.
Length: approx 12 ft (3.6m).

FRAME ADAPTER: a 7-inch (18 cm) high panel which allows two Model 1331's to be mounted side-by-side in a standard 19-inch (48 cm) rack.

FILLER PANEL: covers half of a Frame Adapter when only one Model 1331 is in a Frame Adapter.

Table 1-3. Reference Designators and Abbreviations

REFERENCE DESIGNATORS

A	= assembly	E	= misc. electrical part	P	= plug	U	= integrated circuit (unrepairable)
AT	= attenuator, resistive termination	F	= fuse	PS	= power supply	V	= vacuum tube, neon bulb, photocell, etc.
B	= motor, fan	FL	= filter	Q	= transistor	VR	= voltage regulator (diode)
BT	= battery	H	= hardware	R	= resistor	W	= cable
C	= capacitor	J	= Jack	RT	= thermistor	X	= socket
CP	= coupling	K	= relay	S	= switch	Y	= crystal
CR	= diode	L	= inductor	T	= transformer	Z	= network
DL	= delay line	LS	= speaker	TB	= terminal board		
DS	= device signaling (lamp)	M	= meter	TP	= test point		
		MP	= mechanical part				

ABBREVIATIONS

A	= ampere(s)	FET	= field-effect transistor(s)	n	= nano (10^{-9})	rfi	= radio frequency interference
ampl	= amplifier(s)			nc	= normally closed	rms	= root mean square
assy	= assembly			no.	= normally open	rwv	= reverse working voltage
ampltd	= amplitude	G	= giga (10^{9})	npn	= negative-positive-negative		
bd	= board(s)	gnd	= ground(ed)	ns	= nanosecond	SCR	= silicon controlled rectifier
bp	= bandpass	H	= henry(ies)	p	= pico (10^{-12})	sec	= second(s)
c	= centi (10^{-2})	hr	= hour(s)	pc	= printed (etched) circuit(s)	std	= standard
C	= carbon	HP	= Hewlett-Packard	pk	= peak	trmr	= trimmer
ccw	= counterclockwise	Hz	= hertz	pnp	= positive-negative-positive	u	= micro (10^{-6})
coax.	= coaxial	if.	= intermediate freq.	p/o	= part of	usec	= microsecond
coef	= coefficient	intl	= internal	p-p	= peak-to-peak	V	= volts
com	= common	k	= kilo (10^{3})	prgm	= program	var	= variable
CRT	= cathode-ray tube	lb	= pound(s)	prv	= peak inverse voltage(s)	w/	= with
cw	= clockwise	lpf	= low-pass filter(s)	ps	= picosecond	w/o	= without
d	= deci (10^{-1})	m	= milli (10^{-3})	pwv	= peak working voltage	wiv	= working inverse voltage
dB	= decibel	M	= mega (10^{6})	rf	= radio frequency		
ext	= external	ms	= millisecond				
F	= farad(s)						

3/70

SECTION II

INSTALLATION

2-1. INTRODUCTION.

2-2. This section contains instructions for performing an initial inspection of Model 1331A. Installation procedures and precautions are presented in step-by-step order. The procedures for making a claim for warranty repairs and for repacking the instrument for shipment are also described in this section.

2-3. INITIAL INSPECTION.

2-4. The instrument was inspected mechanically and electrically before shipment. Upon receipt, inspect it for damage that may have occurred in transit. Check for broken knobs, bent or broken connectors, and dents or scratches. If damage is found, refer to the claims paragraph in this section. Retain the packing material for possible future use.

2-5. PREPARATION FOR USE.

2-6. Model 1331A is shipped from the factory ready for use as a bench instrument with specifications as listed in Section I. The following paragraphs discuss other mechanical and electrical configurations of the instrument.

2-7. RACK MOUNTING.

2-8. Figure 2-1 shows how one or two instruments can be mounted in a single rack adapter. If only one instrument is to be rack mounted the extra mounting opening in the rack adapter can be closed with a filler panel. Refer to Section I for ordering information on the rack adapter and filler panel.

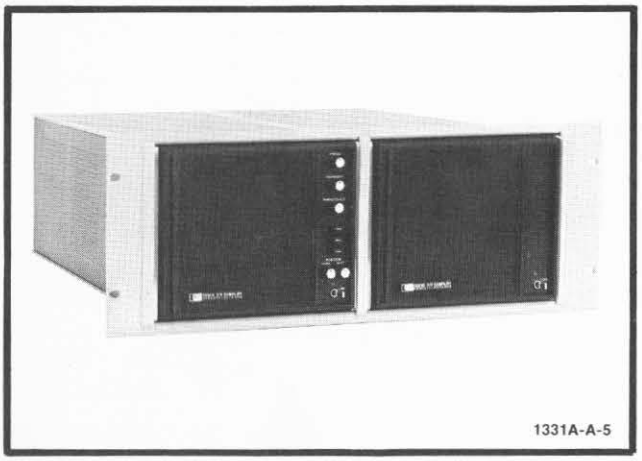

Figure 2-1. Rack Mounting

2-9. POWER REQUIREMENTS.

2-10. Model 1331A operates on either 115 Vac or 230 Vac ±10%, 48 to 440 Hz. All instruments are shipped ready for 115 Vac operation unless specifically ordered for 230 Vac operation. To change from one voltage to the other, set the SELECTOR switch to the voltage desired and install the appropriate fuse in the fuseholder on the rear panel. Correct fuse size is indicated above the fuseholder.

2-11. POWER CONNECTIONS.

2-12. Hewlett-Packard recommends that the instrument panel and cabinet be grounded. Model 1331A is equipped with a three-conductor power cable that, when connected to an appropriate receptacle, grounds the instrument through the offset pin. The power jack and mating plug of the power cord meet International Electrotechnical Commission (IEC) safety standards. To preserve this protection feature when operating from a two-contact outlet, use a three-conductor to two-conductor adapter. Connect the adapter wire to ground at the power outlet.

2-13. INSTRUMENT COOLING.

2-14. Model 1331A is adequately cooled by normal air circulation. The instrument requires at least a 2-inch clearance at sides and top and 5/8-inch at bottom when mounted singly (figure 2-2A). When mounted in this configuration, the maximum ambient temperature must not exceed +55 degC.

2-15. When mounted in pairs, the minimum clearances shown in figure 2-2B must be provided. When mounted in this configuration, the surface directly beneath the instrument(s) must not be a heat source and the maximum ambient temperature must not exceed +45 degC.

2-16. The clearances indicated in figure 2-2 will provide adequate ventilation if air is allowed to circulate freely across all surfaces and the specified maximum ambient temperatures are not exceeded. Other mounting configurations and environments may require additional cooling measures.

2-17. MONITORED INPUTS.

2-18. Input signals to be displayed are connected to the X-, Y-, and Z-axis amplifiers through BNC connectors on the rear panel. The impedance of signal sources must be 20 kilohms or less. The impedance

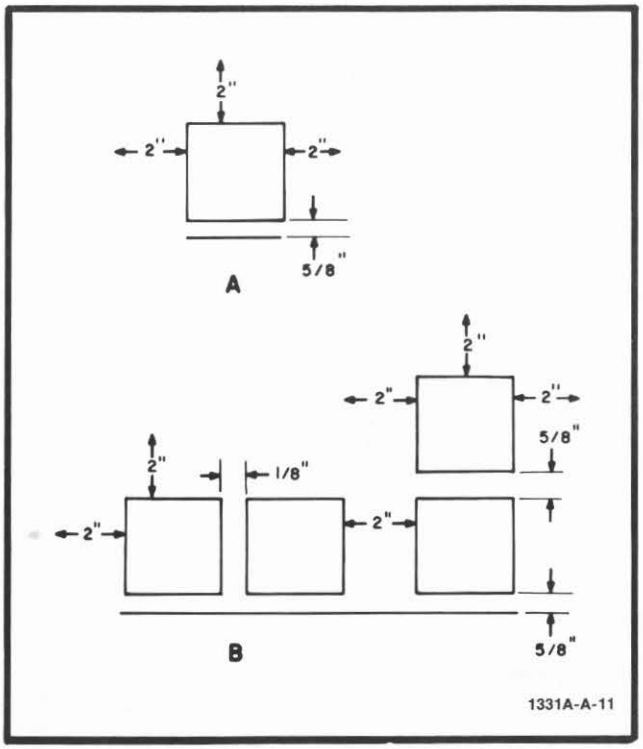

Figure 2-2. Ventilation Tolerances

from the BNC shield to ground must be less than 1 kilohm. Inputs not in use should be shorted. This can be done with a BNC shorting plug (HP Part No. 1250-0774).

2-19. AMPLIFIER INPUT MODIFICATIONS.

2-20. Several modifications can be made to the X-, Y-, and Z-axis amplifier input circuits. These circuits can be connected for either differential or single-ended operation. The input termination resistance can be changed. The input attenuation ratio can be changed. The modifications are described in the following paragraphs.

2-21. Deflection Amplifier Inputs. The inputs to the x- and y-axis amplifiers are through floating BNC connectors, with the shield and center conductor connected to the two inputs of a differential amplifier. Figure 2-3 is a simplified schematic showing the configuration of one deflection amplifier input. As shipped from the factory, Ra = Rb = 2.7Ω, Rc = 100 kΩ, and Rd = 47Ω. Ca, Cb, Cc, and Cd are not installed but pads are provided on the circuit board (see figure 2-4) for customer installation. The inputs can be modified to be fully differential and balanced, both in impedance and sensitivity, completely single ended with shield grounded (A and B on figure 2-4), or anything in between.

2-22. Single-ended Operations. When coaxial cable is used, large spurious currents may be generated in the cable shield through capacitive or inductive coupling and none, or very little, in the center conductor. This is especially true where long cables are used or where the cable is routed near units drawing or generating large amounts of current. One method of reducing the interference is to ground the shield at the input. Sometimes, however, a common mode rejection capability is needed to reject noise common to both the shield and the center conductor. At other times, ground loops may develop when the shield is directly grounded. In these cases, a satisfactory compromise is accomplished by substituting a low value of resistance for Rd. This is the input configuration (Rd = 47Ω) of Model 1331A as shipped from the factory.

2-23. Differential Operation. If the deflection input is driven by a balanced cable, it is usually better to maintain balanced impedances at the input; that is, Rc = Rd. As shipped from the factory, substituting a 100 kΩ resistor for Rd restores full differential balance.

2-24. X- and Y-axis Amplifier Attenuation. As shipped from the factory, full scale deflection (8 divisions vertical and 10 divisions horizontal) is accomplished with 1 volt input to X INPUT or Y INPUT. The attenuation ratio can be changed by changing the values of the attenuator components in the input circuits. Figure 2-3 is a simplified schematic showing the input circuit components and figure 2-4 shows their physical locations. Table 2-1 lists the components required for four common attenuation ratios. Table 2-2 contains a description of the components and their Hewlett-Packard part numbers.

NOTE

The 2.7 ohm resistor shown in figure 2-3 must be removed when Ra is used.

2-25. Resistor values for attenuation ratios not listed in table 2-1 can be determined from the following formula:

$$Vfsd = \frac{Ra + Rc}{Rc}$$

CAUTION

Resistor spacing on main assembly A5 is for ½W, 1%, metal film resistors. If $R_a + R_c$ is less than 5 kilohms, the maximum input voltage must be reduced because of resistor power dissipation limitations.

Table 2-1. X-Y Attenuator Component Values

V_{fsd} Full-Scale Deflection Voltage	Ra, Rb	Rc, Rd	Ca, Cb	Cc, Cd	Approximate Input Impedance
1 (as shipped)	0	100k	0	0	100k
2	51.1k	51.1k	5.5-18 pF	0	102.2k
5	82.5k	20k	5.5-18 pF	33 pF	102.5k
10	90.9k	10k	0	0	100.9k

Table 2-2. Attenuator Components Parts List

Description	HP Part No.
R: fixed, metal film, 100k, 1% 1/2W	0757-0367
R: fixed, metal film, 82.5k ohms, 1% 1/2W	0757-0048
R: fixed, metal film, 51.1k ohms, 1% 1/2W	0757-0853
R: fixed, metal film, 20k ohms, 1% 1/2W	0757-0190
R: fixed, metal film, 10k ohms, 1% 1/2W	0757-0839
R: fixed metal film, 10k ohms, 1%, 1/8W	0757-0442
R: fixed, metal film, 9090 ohms, 1%, 1/8W	0757-0288
R: fixed, metal film, 5110 ohms, 1%, 1/8W	0757-0438
R: fixed, metal film, 1000 ohms, 1% 1/8W	0757-0280
R: fixed, metal film, 100 ohms, 1%, 1/8W	0757-0401
C: variable, 5-5 – 18 pF	0121-0061
C: variable 9–35 pF	0121-0046
C: fixed, 33 pF	0160-2150

Table 2-3. Z-attenuator Component Values

Vmax	R173 R174	R175 R182	C_c	Approximate Input Impedance
1 (as shipped)	100Ω	10K	0	10.1K
2	5110Ω	5110Ω	9–35 pF	10.22K
10	9090Ω	1000Ω	0	10.09K

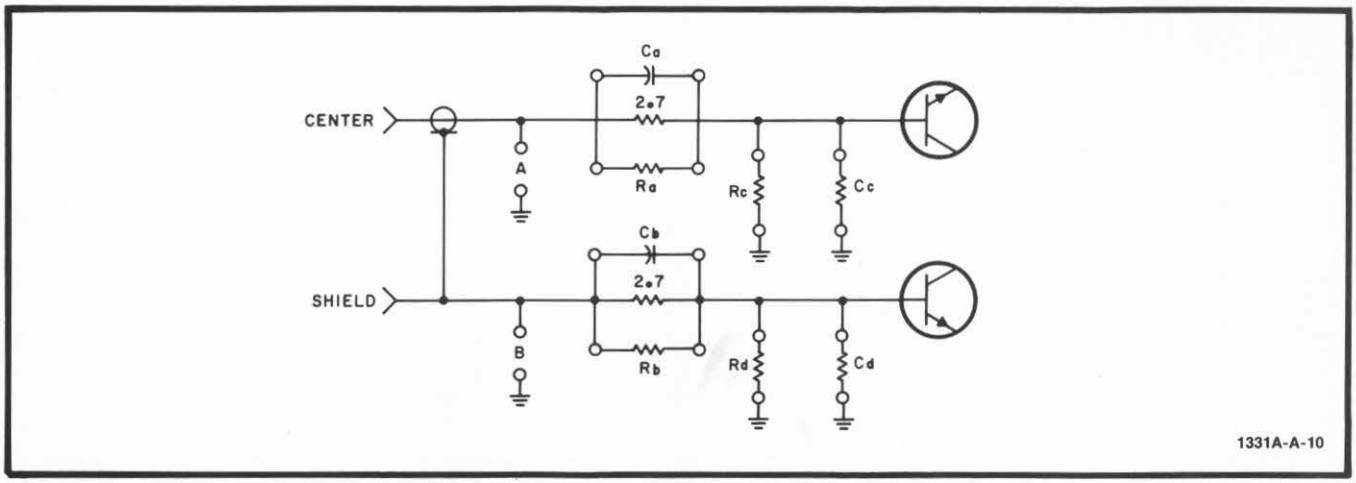

Figure 2-3. X-Y Amplifiers Input Circuit

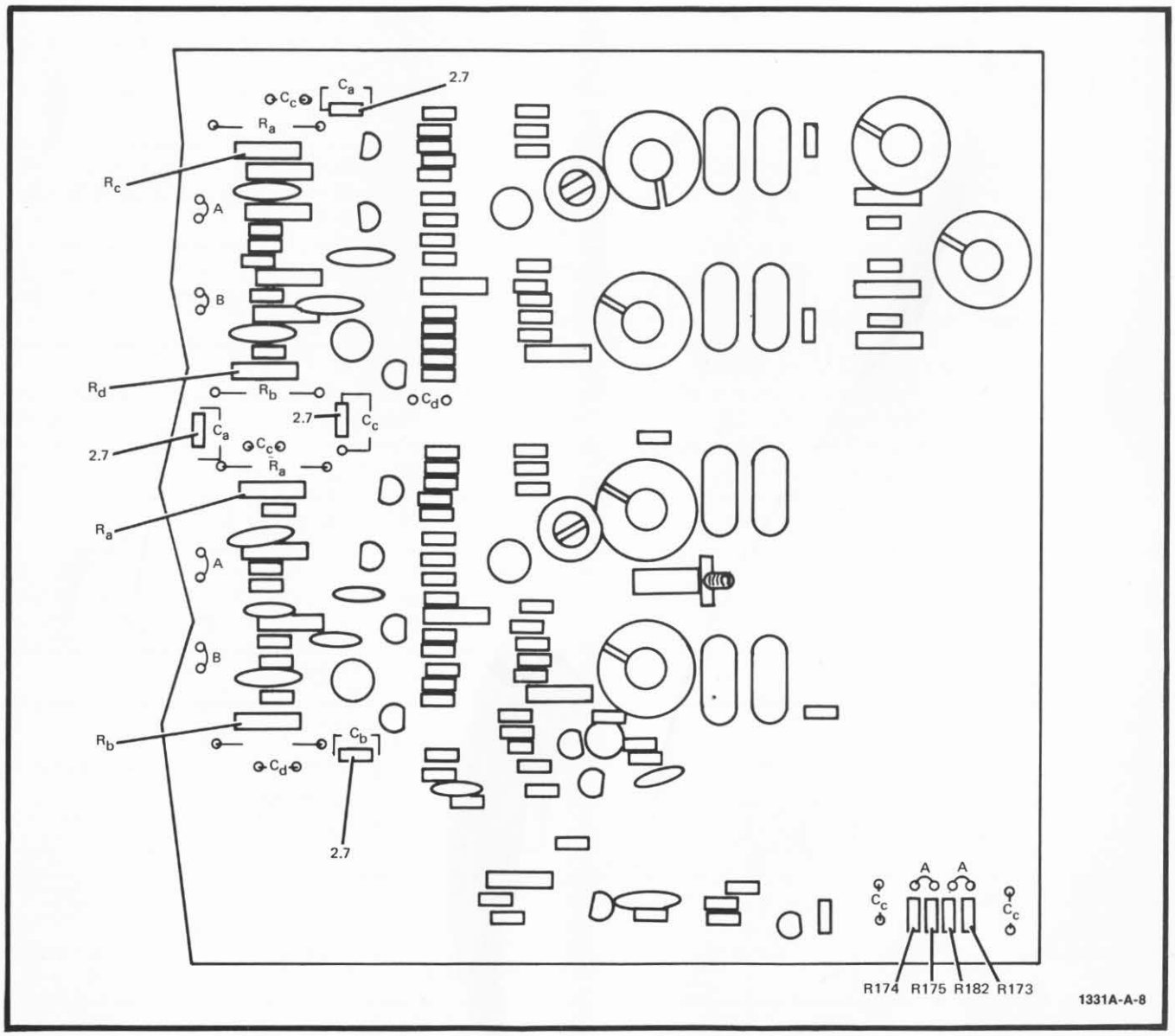

Figure 2-4. Attenuator Components Locations on Main Board A5

2-26. The approximate value, in picofarads, of compensation capacitor C_a can be determined from the following formula:

$$C_a = \frac{R_c}{13\ R_a}$$

2-27. If practical values of C_a cannot be attained from the formula in paragraph 2-25, add shunt capacitor C_c and use the following formula to recalculate C_a:

$$C_a = \frac{(C_c + 13)\ R_c}{R_a}$$

2-28. Z-axis Amplifier Attenuation. The attenuation ratio of the input circuit of the z-axis amplifier can be changed by changing the values of A5R90 or A5R174 and A5R182 or all four if differential input is required. Three common attenuation ratios are listed in table 2-3. Other values can be calculated with the following formula:

$$Vmax = \frac{R182 + R174}{R182}$$

2-29. If the ratio of R_a to R_b is between 0.1 and 10, compensation capacitor C_c may be required. If required, use the following formula:

$$C_c = \frac{R182}{13\ R174}$$

NOTE

Vmax is the voltage that will produce full intensity or blanking (depending on polarity).

2-30. Termination Impedance. The input termination resistance of the x- and y-axis amplifiers is normally 100 kilohms single ended and 200 kilohms differential. The z-axis amplifier is 10 kilohms single ended and 20 kilohms differential. The termination resistance can be changed by either of two methods: changing attenuation resistors, or connecting a third resistance between input and ground. The second method is simple because it does not change the attenuation ratio. Because of design considerations, the second method cannot be used on the z-axis amplifier.

2-31. When changing attenuation resistor values to get a certain termination impedance, two things must be considered: the termination impedance and the attenuation ratio. For example, when a 75-ohm termination and a 5:1 ratio are required, the resistance values are: R_a = 60 and R_C = 15 (A5R174 and A5R175 respectively for the z-axis amplifier). The information on compensation in the paragraphs on x- and y-axis attenuation applies here, but compensation may not be required when R_a and R_C have been changed to produce a low termination impedance (<1 kilohm).

2-32. When shunting a resistance across the amplifier input to change (lower) the impedance, the main consideration is the desired impedance. Select a resistor and insert it between the amplifier input and ground (point A on figures 2-3 and 2-4). If less than 10 kilohms are used, maximum input voltage to the amplifier must be reduced because of resistor power dissipation limitations.

2-33. CLAIMS.

2-34. The warranty statement applicable to this instrument is printed inside the front cover of this manual. Refer to the rear of this manual for the CRT warranty statement. If physical damage is found or if operation is not as specified when the instrument is received, notify the carrier and nearest HP Sales/Service Office immediately (refer to the list in back of this manual for addresses). The HP Sales/Service Office will arrange for repair or replacement without waiting for settlement of the claim with the carrier.

2-35. REPACKING FOR SHIPMENT.

2-36. If the Model 1331A is to be shipped to an HP Sales/Service Office for service or repair, attach a tag showing owner (with address), complete instrument serial number, and a description of the service required.

2-37. Use the original shipping carton and packing material. If the original packing material is not available, the HP Sales/Service Office will provide information and recommendations on materials to be used. Materials used for shipping an instrument normally include the following:

a. A double-walled carton of at least 275 pound test strength.

b. Heavy paper or sheets of cardboard to protect all instrument surfaces; use a nonabrasive material such as polyurethane or cushioned paper such as Kimpak around all projecting parts.

c. At least 4 inches of tightly-packed, industry-approved, shock-absorbing material such as extra-firm polyurethane foam.

d. Heavy-duty shipping tape for securing outside of carton.

SECTION III

OPERATION

3-1. INTRODUCTION.

3-2. This section contains an explanation of Model 1331A operating controls, modes of operation, operator's checks and adjustments, and step-by-step operating instructions. Table 3-1 contains a list of words and phrases used to describe the operation of the instrument.

3-3. CONTROLS AND CONNECTORS.

3-4. All controls and connectors are identified and described in figure 3-1. Controls requiring further explanation are covered in the following paragraphs.

3-5. BEAM FIND.

3-6. The BEAM FIND control is a slide switch used to locate the beam when it is deflected off screen due to a large input voltage, misadjustment of the POSITION controls, or a malfunction. To operate the BEAM FIND control, proceed as follows:

a. Set INTENSITY fully ccw.

b. Set BEAM FIND to ON.

c. Turn INTENSITY slowly cw until beam is visible.

d. Determine action required to return beam to viewing area.

e. Set BEAM FIND to off. Model 1331A will not operate correctly with BEAM FIND set to ON.

3-7. INTENSITY.

CAUTION

A high intensity display over an extended period of time can cause burn damage to the CRT display area.

Table 3-1. Definitions

Word or Phrase	Definition
Write	To transform an input signal into a visual display on the CRT.
Persistence	The length of time a display remains on the CRT after the writing signal has been removed.
Store	To retain, for an extended period of time, a display that has been written on the CRT.
Erase	To remove all displays and blooms that have been written or stored on the CRT.
Intensity	The brightness of a display written on the CRT.
Bloom	Visible, nonsymmetrical expansion and distortion of a display written on the CRT.
Background illumination	A light-green illumination covering the entire CRT viewing area.
Fade positive	An increase in background illumination intensity occuring in either write or store mode.
Fade negative	A decrease in trace intensity occuring in either write or store mode.

3-8. The INTENSITY control adjusts the display intensity from completely off (ccw) to maximum brightness (cw) in the write mode. To avoid damage to the CRT, follow the preoperational procedure in figure 3-2 before operating the instrument. Increase intensity slowly until the display brightness is at a comfortable viewing level without blooming.

3-9. APPLICATIONS.

3-10. Model 1331A can be used for any application of x-, y-, and z-axis displays within its bandwidth and sensitivity specifications (refer to specifications in Section I). Furthermore, the type of input (differential or single ended), amplifier deflection factor, and amplifier input termination impedance can be modified (Section II) to meet the requirements of many specific applications. Refer to the description paragraph in Section I for a list of suggested applications.

3-11. PREOPERATION ADJUSTMENTS AND OPERATOR'S CHECKS.

3-12. The preoperational procedure is shown in figure 3-2. This procedure also serves as an operator check to verify proper operation of the instrument.

3-13. OPERATOR'S MAINTENANCE.

3-14. Operator's maintenance of Model 1331A is limited to the operator's checks in paragraph 3-12 and exterior cleaning of the instrument. Pull upward on the contrast screen for removal and cleaning. This exposes the face of the CRT for cleaning. Glass surfaces and smooth metal surfaces can be cleaned with a commercial glass cleaner. Stubborn residues can be removed with a mild liquid household detergent.

3-15. OPERATING PROCEDURES.

3-16. Figures 3-2 through 3-4 contain step-by-step operating procedures. The index numbers on the photographs correspond to step numbers in the instructions. Only the basic operating techniques are explained in the illustrations. These techniques can be modified or combined to fill a wide variety of unique operating requirements.

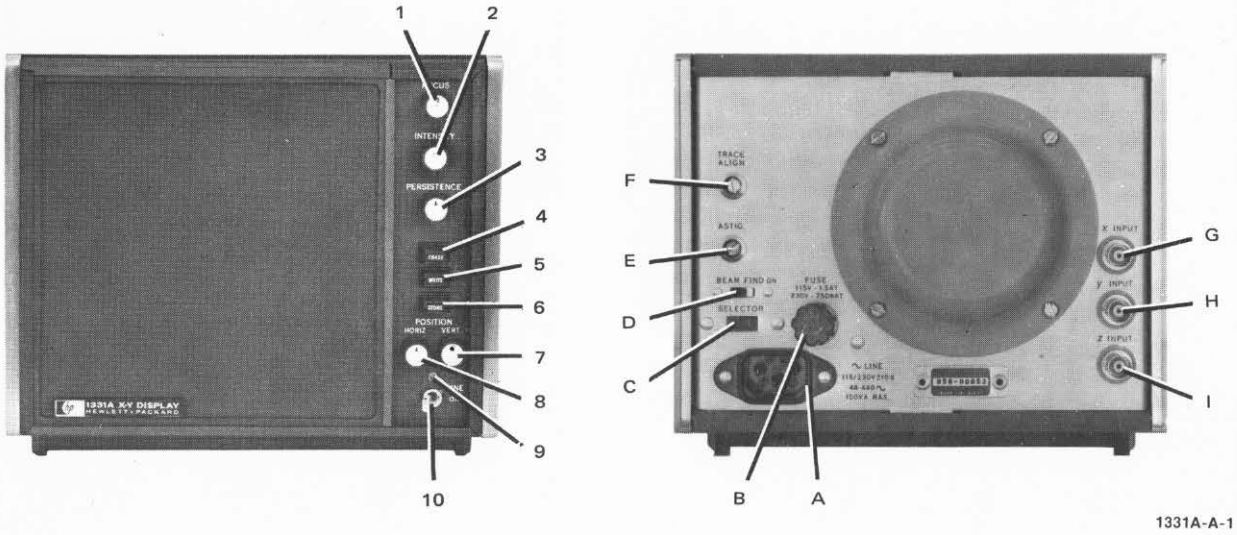

FRONT PANEL

1. FOCUS. Adjusts sharpness of trace.
2. INTENSITY. Adjusts brightness of trace. Refer to Paragraph 3-8.
3. PERSISTENCE. Adjusts duration of trace in write mode.
4. ERASE. Press and release to remove display from CRT viewing area. Operates in write mode only.
5. WRITE. Press in to write and display input information on CRT.
6. STORE. Press in to store input information for an extended time on CRT.
7. VERT POSITION. Adjusts vertical position of trace.
8. HORIZ POSITION. Adjusts horizontal position of trace.
9. LINE indicator. Lights when operating power is applied to instrument.
10. LINE switch. Applies operating power to instrument.

REAR PANEL

A. LINE. Connects instrument to operating power.

B. FUSE. Protects instrument from current overloads.

C. SELECTOR. Connects power transformer for 115V or 230V operation.

D. BEAM FIND. Brings off-screen trace back into viewing area. Refer to Paragraph 3-5.

E. ASTIG. Adjusts trace dot symmetry.

F. TRACE ALIGN. Aligns trace with horizontal graticule.

G. Y INPUT. Input connector for y-axis amplifier.

H. X INPUT. Input connector for x-axis amplifier.

I. Z INPUT. Input connector for z-axis amplifier.

Figure 3-1. Model 1331A Controls and Connectors

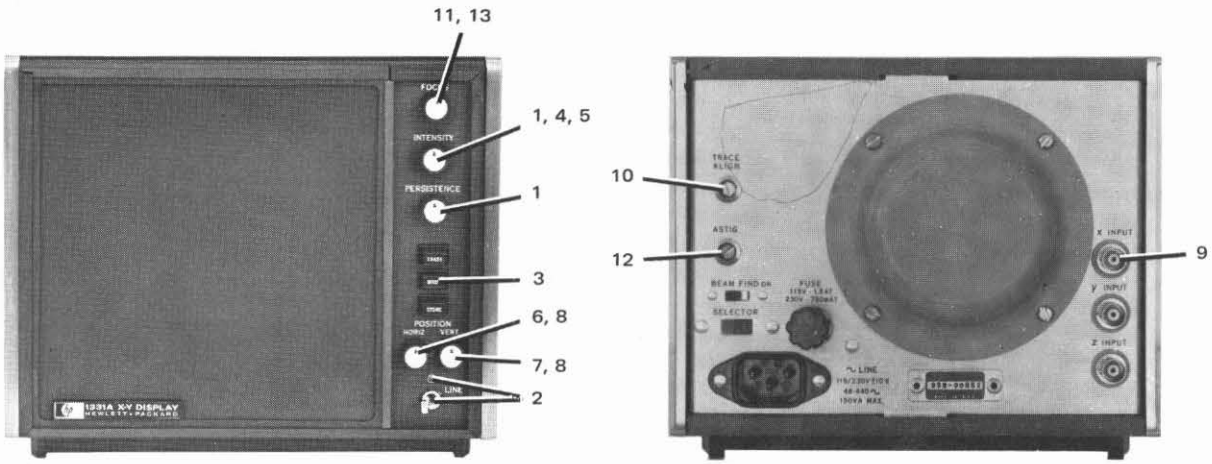

1331A-A-2

1. Set INTENSITY, and PERSISTENCE full ccw.

2. Set LINE switch to ON and observe that LINE indicator lights.

3. Put instrument in write mode by pressing WRITE pushbutton.

CAUTION

Do not allow the dot to bloom when adjusting the INTENSITY control.

4. Adjust INTENSITY control. Display dot brightness should vary from completely extinguished in full ccw position to an acceptable viewing brightness, as control is turned cw.

5. Adjust INTENSITY control so display dot is easily visible with minimum persistence.

6. Adjust HORIZ POSITION control through its full range. Display dot will move horizontally across CRT and out of viewing area at either extreme of control.

7. Adjust VERT POSITION control through its full range. Display dot will move vertically across CRT and out of viewing area at either extreme of control.

8. Adjust HORIZ and VERT POSITION controls to center display dot on CRT.

9. Apply 1 kHz, 1V p-p signal to X INPUT connector. This will cause horizontal trace to appear on CRT.

10. Adjust TRACE ALIGN as necessary to align trace with horizontal graticule lines.

11. Adjust FOCUS control through its full range. Display dot will be defocused at each extreme of control and focused near midrange. Adjust for defocused display dot.

12. Adjust ASTIG control for best display dot symmetry (roundness).

13. Adjust FOCUS for smallest dot size.

Figure 3-2. Preoperational Procedure

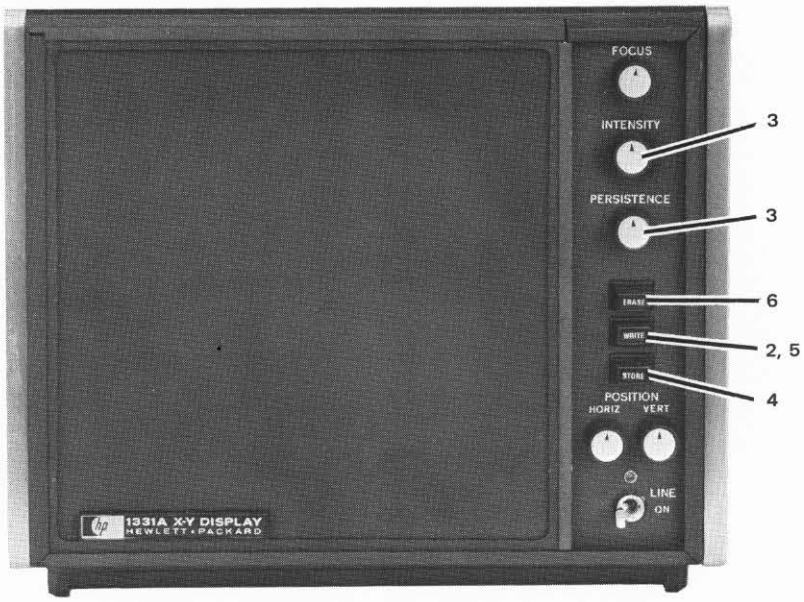

1. Perform preoperational procedures (figure 3-2).

TO WRITE

2. Press WRITE pushbutton.

3. Adjust INTENSITY and PERSISTENCE controls for desired brightness and duration of display.

NOTE

Excessive intensity and persistence when writing a display reduces the time a display can be stored.

TO STORE

4. Press STORE pushbutton.

TO ERASE

5. Press WRITE pushbutton.

6. Press ERASE pushbutton.

7. Erasure should take place prior to writing each new piece of information, except in cases where two or more pieces of information are to be displayed simultaneously (Figure 3-4).

1331A-A-3

Figure 3-3. General Operating Procedure

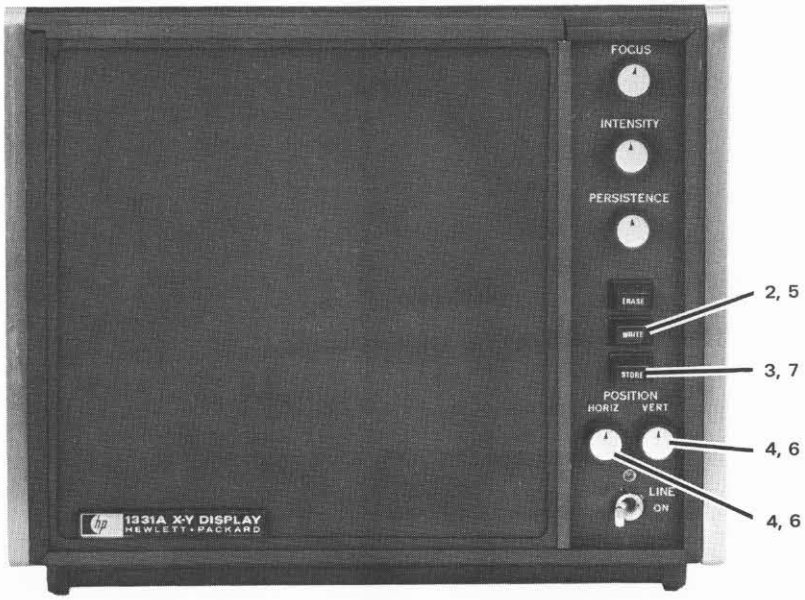

1. Perform preoperational procedures (figure 3-2).

2. Press WRITE pushbutton.

3. After desired information has been written, press STORE pushbutton.

4. Use HORIZ and VERT POSITION controls to position trace so that information to be written will not interfere with information previously written.

NOTE

Keep write periods short. Each write period reduces the time that previously written information can be stored.

5. Press WRITE pushbutton.

6. Use HORIZ and VERT POSITION controls to position trace as desired.

7. Press STORE pushbutton after desired information is written.

8. Repeat this procedure as many times as desired.

1331A-A-4

Figure 3-4. Multiple Display Procedure

HEWLETT hp PACKARD

CATHODE-RAY TUBE WARRANTY

The cathode-ray tube (CRT) supplied in your Hewlett-Packard Oscilloscope and replacement CRT's purchased from hp are warranted by the Hewlett-Packard Company against electrical failure for a period of one year from the date of sale. Broken tubes and tubes with phosphor or mesh burns are not included under this warranty. If the CRT is broken when received, a claim should be made with the responsible carrier. All warranty claims with Hewlett-Packard should be processed through your nearest Hewlett-Packard Sales/Service Office (listed at rear of instrument manual).

We would like to evaluate every defective CRT. This engineering evaluation helps us to provide a better product for you. Please fill out the CRT Failure Report on the reverse side of this sheet and return it with the defective CRT to:

Hewlett-Packard Company
1900 Garden of the Gods Road
Colorado Springs, Colorado 80907

Attention: CRT QA

To avoid damage to the tube while in shipment, please follow the shipping instructions below; warranty credit is not allowed on broken tubes.

SHIPPING INSTRUCTIONS

It is preferable that the defective CRT be returned in the replacement CRT carton. If the carton or packaging material is not available, pack the CRT according to the instructions below:

1. Carefully wrap the tube in 1/4 inch thick cotton batting or other soft padding material.

2. Wrap the above in heavy kraft paper.

3. Pack wrapped tube in a rigid container which is at least 4 inches larger than the tube in each dimension.

4. Surround the tube with at least 4 inches of packed excelsior or similiar shock absorbing material; be sure the packing is tight all around the tube.

Thank you,

CRT Department

5950-7124

HEWLETT hp PACKARD

CATHODE-RAY TUBE FAILURE REPORT

DATE _____

FROM:

NAME _____

COMPANY _____

ADDRESS _____

1. HP instrument MODEL NO. _____
2. HP instrument SERIAL NO. _____
3. CRT SERIAL NO. _____
4. Please describe the failure and, if possible, show the trouble on the appropriate CRT face below.

_____

_____

_____

_____

_____

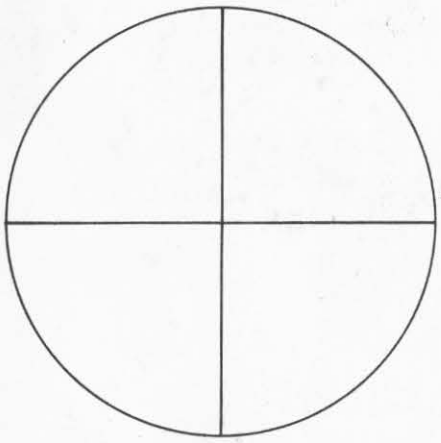

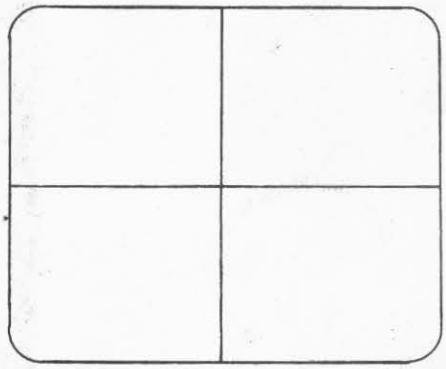

5. Warranty claimed ? Yes _____ No _____
6. HP Sales/Service Office _____ Repair Order No. _____

SECTION IV

PRINCIPLES OF OPERATION

4-1. INTRODUCTION.

4-2. This section contains a simplified explanation of the principles of variable persistence and storage. It also contains functional descriptions of Model 1331A keyed to an overall block diagram and to block diagrams of circuit groups. A detailed explanation of circuit functions, keyed to the schematics, is provided after the block diagram discussion.

4-3. VARIABLE PERSISTENCE AND STORAGE.

4-4. The following simplified explanations are provided to give the reader a better understanding of the overall operation of the instrument.

4-5. THE STORAGE CRT.

4-6. The storage CRT (figure 4-1) contains a conventional electrostatic deflection electron gun and an aluminized phosphor viewing surface. The conventional electron gun in a storage tube is called the write gun. Additionally, the storage CRT contains a second electron gun (called the flood gun), flood beam shaping and accelerator grids, collimator, a collector mesh, and a storage mesh. These storage and variable persistence elements are located between the write gun and the viewing phosphor.

4-7. The flood gun is located just outside the write gun's horizontal deflection plates. Its function is to emit a cloud of electrons from its cathode. The electron cloud (flood electrons) is shaped and accelerated toward the storage mesh by the collimator and the collector mesh. The collimator is a conductive coating on the inside of the funnel section of the CRT glass. The collector mesh is an electrically transparent metallic mesh located just behind the storage mesh.

4-8. The action of the storage mesh makes storage and variable persistence possible. It is an electrically transparent metallic mesh covered with a special coating consisting of a dielectric material. Storage action takes place on the outside surface of the coating. This surface is called the storage surface. The dielectric material causes capacitive coupling between the storage mesh and the storage surface. In operation, the storage mesh is held at about +4 volts. Because of the capacitive coupling, the storage surface drops to about —10 volts. In this condition, the flood electrons are repelled and collected by the collector mesh.

4-9. The discussion in the previous paragraph assumed that the write gun was turned off. If the write gun is now turned on, the electron beam (whose energy is much higher than the flood electrons) strikes the storage surface with such force that electrons already on the storage surface are knocked off (secondary emission). The secondary emission electrons are collected by the collector mesh. Wherever the write gun electron beam strikes the storage surface, the potential at that point rises due to the loss of electrons. Because these points have become more positive, flood gun electrons pass through and strike the phosphor viewing screen. In this manner, the pattern traced by the write gun beam is written (and stored) on the storage surface.

4-10. SECONDARY EMISSION RATIO.

4-11. Figure 4-2 is the secondary emission ratio curve of the storage surface. The secondary emission ratio is the basis for storage of information on the storage surface and for erasure of information from the storage surface. The point where the number of electrons leaving the storage surface equals the number arriving is called a crossover point. At a crossover point the secondary emission ratio = 1. When more electrons are leaving than arriving, the potential of the storage surface rises; when more are arriving than leaving, the potential decreases.

4-12. ERASE CYCLE.

4-13. Figure 4-3 graphically shows the variations of the potentials on the storage surface during the erase cycle. Prior to initiation of the cycle, the storage mesh is held at +4 volts. The unwritten areas of the storage surface are at —10 volts and the written areas are near 0 volt. When the ERASE pushbutton is pressed, the storage mesh and the storage surface are brought to the same potential as the collector mesh, +158 volts. When the ERASE pushbutton is released both storage mesh and storage surface are dropped to approximately —12.5 volts. During an erase timing period of approximately 800 milliseconds, an RC charging action brings the storage mesh up to +14 volts. Capacitive coupling between the storage mesh and the storage surface causes the storage surface to follow and rise to 0 volt. At the end of the erase timing period, the storage mesh potential is returned to +4 volts and the storage surface to —10 volts. All these actions are caused by waveforms applied to the storage mesh by the pulse circuits in Model 1331A.

4-14. After the erase cycle, previously written information has been removed and the storage surface is ready to store new information. Write gun electrons (with much higher than crossover energy) charge the storage surface in a positive direction only in the areas where they strike the storage surface. Flood electrons pass through these areas and are pulled to the phosphor viewing screen by the high potential on the post accelerator.

4-15. VARIABLE PERSISTENCE.

4-16. It is possible to disable the storage elements in the CRT so that the write gun beam writes directly on the phosphor viewing surface. In such a mode, persistence would depend only on the type phosphor. Model 1331A does not use this mode of operation; it uses a method that permits the persistence to be varied. Variable persistence CRTs require some method of removing stored information; otherwise, all information written on the storage surface remains there until the ERASE pushbutton is pressed or until the natural storage time (in excess of 15 minutes) elapses.

4-17. Figure 4-4 graphically shows how variable persistence is obtained. The left side of the graph shows that the storage mesh is fixed at +4 volts. The shaded area shows the potential of both the unwritten and written areas of the storage surface. In the write mode, short erase pulses are applied to the storage mesh and the storage surface is capacitively increased 10 volts for the duration of the pulse. While at this increased potential, the written areas of the storage surface attract and capture flood gun electrons. This tends to lower the potential of the written areas because the capacitance between the storage mesh and the storage surface charges toward 0 volt. At the end of the pulse, the storage mesh returns to its normal level and the storage surface drops 10 volts. The unwritten areas of the storage surface return to —10 volts and the written areas return to a potential slightly more negative than their initial potential. This decrease in potential reduces the ability of the post accelerator to reach through and capture flood gun electrons, and trace brightness is slightly reduced.

4-18. A train of erase pulses gradually erases the written trace as shown by the shaded areas in figure 4-4. The persistence of the written trace is varied by varying the repetition rate of the pulses. A side effect, noticible under some conditions, is a light background glow on the CRT. While the storage mesh is pulsed positive, flood electrons pass through all areas of the mesh to the phosphor viewing screen, evenly exciting the entire surface.

4-19. STORAGE.

4-20. In store mode, erase pulses are not applied to the storage mesh, and persistence (store time) is limited primarily by an effect called fade positive. This occurs on the storage surface and is caused by ionization of residual gas molecules by flood gun electrons. The storage surface gradually charges more positive and allows flood electrons to penetrate to the phosphor viewing area where they increase background illumination until the display is obscured. Fade positive is reduced (and store time increased) in store mode by keeping the flood gun turned off except for brief periods to refresh the display.

4-21. STORAGE PRECAUTIONS.

4-22. When write gun electrons strike the storage surface, they cause a very rapid increase in potential. The energy from this sudden change is converted to heat and, when it exceeds the heat dissipation rating of the storage surface, burns the dielectric material. The burning action is visible as trace blooming. The intensity level of the write gun should always be set below the point where blooming occurs.

4-23. BLOCK DIAGRAM DISCUSSION.

4-24. This discussion illustrates the relationships of the circuit groups (blocks) to each other. It is based on the overall block diagram, figure 4-6.

4-25. LOW VOLTAGE POWER SUPPLIES.

4-26. This block provides power to all the other blocks, including the high voltage power supply. Outputs at four dc voltages are supplied: +50V, —50V, +12.5V, and +158V. The —50V supply is adjustable and all the other low voltage supplies are referenced to it. The +12.6V supply is also adjustable.

4-27. HIGH VOLTAGE POWER SUPPLY.

4-28. The high voltage power supply provides the high voltage potentials to operate the CRT: —2915 volts for the write gun cathode, approximately —2955 volts for the write gun grid, and +7.5 kilovolts for the post accelerator. The write gun intensity limit adjustment, hv adj, and the FOCUS control are part of the high voltage power supply. The gate amplifier controls the intensity and blanking functions of the CRT by controlling the voltage to the write gun grid.

4-29. X- AND Y-AXIS AMPLIFIERS.

4-30. The x- and y-axis amplifiers are nearly identical and serve to drive the CRT horizontal and vertical deflection plates. POSITION and BEAM FIND controls are included in these blocks as well as the gain and phase shift adjustment.

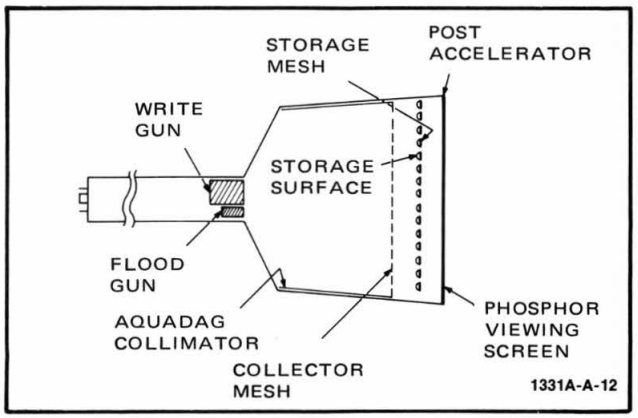

Figure 4-1. CRT Schematic

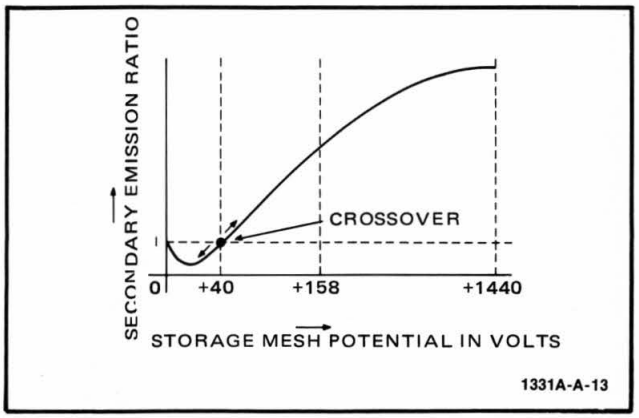

Figure 4-2. Secondary Emission Ratio

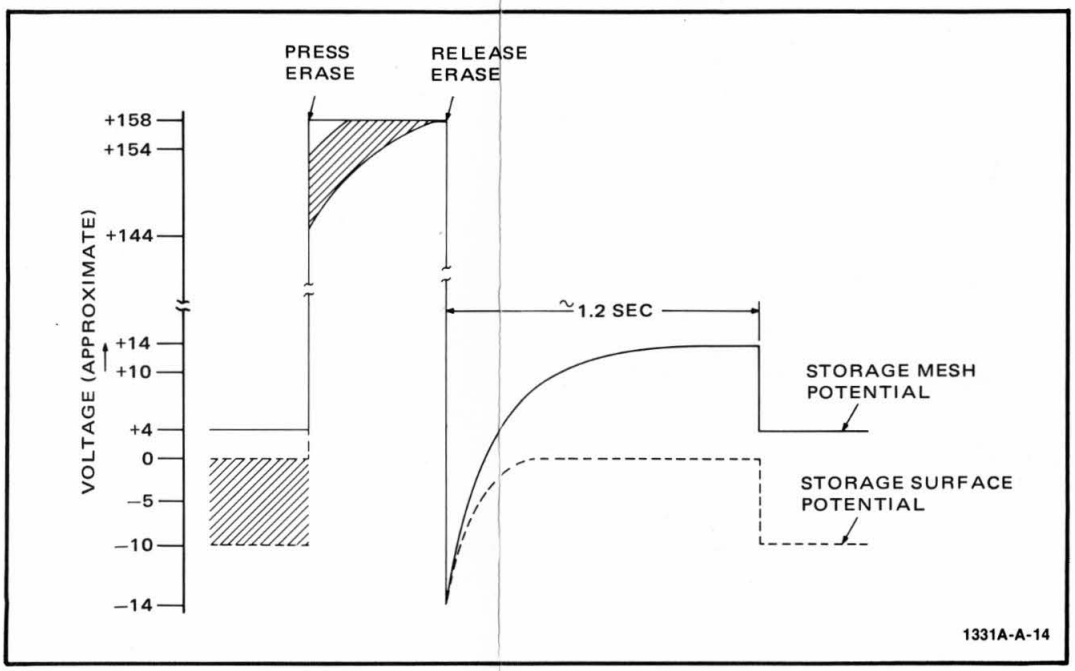

Figure 4-3. Erase Cycle

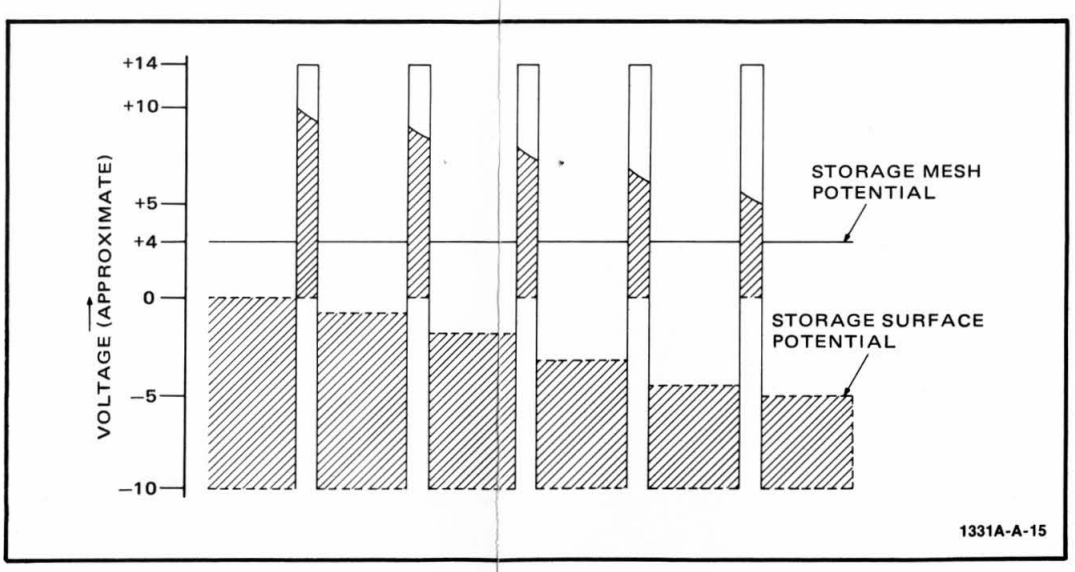

Figure 4-4. Variable Persistence Pulsing

4-31. Z-AXIS AMPLIFIER.

4-32. The z-axis amplifier provides the voltage and current gain required to drive the intensity gate, permitting external intensity control (z-axis modulation).

4-33. INTENSITY GATE.

4-34. Intensity is controlled by three inputs to the intensity gate: the dc output from the INTENSITY control, the dynamic output from the z-axis amplifier, and the blanking signal from the pulse circuits. The three inputs are summed in the input circuit and drive the input to the gate amplifier. The amplitude of the blanking signal is large enough to override the other inputs. The gate amplifier provides the dynamic range to drive the CRT between complete cutoff and maximum brightness.

4-35. CONTROL CIRCUITS.

4-36. The control circuits determine mode (WRITE and STORE), initiate the erase cycle (ERASE), determine persistence of the display (PERSISTENCE), and determine store time (store time adj). All these functions are controlled by front panel controls except store time adj, which is an internal adjustment located on the program board, A6.

4-37. PULSE CIRCUITS.

4-38. The pulse circuits provide the operating and timing signals for the mode and erase functions. The pulse circuits are shown in greater detail in figure 4-5. The inputs are analog and digital commands from the control circuits and the outputs are timed waveforms and dc voltages to control the storage and variable persistence elements of the CRT. Some of the transistor switches function as logic circuits and are shown on the block diagrams as NOR (negated OR) gates. If any input to a NOR gate is HI, the output will be LO; if all inputs are LO, the output will be HI. HI and LO refer to logic states. HI is the more positive of two different logic levels. The voltages designated are probably different at different points in the circuit.

4-39. Write Mode. See figure 4-5A. A write command (LO) is applied on the mode input to the inverter. The HI output of the inverter causes LO outputs from the write gate and flood gun gate. The LO output from the flood gun gate affects the flood gun switch in two ways: it inhibits the input from the pulse generator (no pulses pass through the flood gun switch) and causes the output of the flood gun switch to go HI. This turns the CRT flood gun on.

4-40. The LO output from the write gate activates the blanking gate. The HI output from the blanking gate causes an unblanking command (LO) to be applied by the output of the blanking amplifier to the gate amplifier. The LO output from the write gate also enables the storage gate; this permits the pulses from the pulse generator to turn the storage gate on and off. The resultant pulses are applied through the storage erase circuit to the CRT storage mesh.

4-41. Store Mode. See figure 4-5B. A store command (HI) is applied on the mode input to the inverter. The LO output from the inverter causes a HI output from the write gate and flood gun gate.

4-42. The HI output from the flood gun gate enables the pulse generator input to the flood gun switch. The flood gun switch applies the amplified pulses to the CRT flood gun accelerator.

4-43. The HI output from the write gate causes the output of the blanking gate to go LO. This causes the blanking amplifier to apply a blanking command (HI) to the gate amplifier. The LO output of the blanking gate also operates the deflector switch, causing —49 volts to be applied to one side of the x-axis amplifier. This deflects any stray electrons from the write gun away from the target area of the CRT.

4-44. The HI output of the write gate causes the output of the storage gate to go LO. In this condition, the pulse generator input to the storage gate is inhibited and the pulses do not appear at the output of the storage gate. The output of the storage gate is clamped in the LO state causing the storage switch to apply +3.5 volts to the CRT storage mesh.

4-45. Erase Function. See figure 4-5C. Before the erase function can be activated, the WRITE pushbutton must be pressed. When pressed, the ERASE pushbutton applies +158 volts to the erase switch, the storage erase circuit, and directly to the CRT storage mesh.

4-46. The time during which the ERASE pushbutton is manually closed is called prime time. There is no limit set for prime time; it depends on the operator. During prime time, +158 volts is applied to the pulse circuits to accomplish three actions. First, +158 volts is applied directly to the CRT storage mesh (see figure 4-3 and paragraph 4-13). Second, +158 volts is applied to the erase timing circuit; this causes a capacitor to be charged in preparation for the basic RC timing action. Third, +158 volts is applied to the storage erase circuit; this causes a capacitor to be discharged in preparation for another RC timing action. Prime time is indicated in figure 4-5C as time period A.

4-47. When the ERASE pushbutton is released, the +158 volts is removed and the RC timing actions begin. These timing actions create an erase timing period approximately 800 milliseconds long. The erase timing period is indicated in figure 4-5C as time period C.

4-48. Some of the waveforms indicated on figure 4-5C are present only during prime time (time period A). Others are present only during the erase timing period (time period C). Still others are present during both prime time and the erase cycle. Prime time plus the erase timing period is indicated in figure 4-5 as time period B.

4-49. The erase switch initiates 3 actions on 2 output lines. Two output lines are required because different circuits require different operating voltage levels. Both output lines go HI during time period C. One output line disables the pulse generator and activates the blanking gate. The other output line activates the collimator driver.

4-50. Because the flood gun switch is activated (A1) any time Model 1331A is not in store mode, the pulse generator must be disabled during time period C to prevent pulses from being applied through the flood gun switch to the flood gun accelerator. The HI output from the erase switch disables the pulse generator.

4-51. One input to the blanking gate was previously activated during pulse period A. The HI from the erase switch activates another input during pulse period C. This causes the output of the blanking gate to be LO during both periods (pulse period B).

4-52. The HI from the inverter holds the output of the write gate LO; now both inputs to the storage gate are LO so the output of the storage gate will tend to go HI. Its rise to the HI state will be an RC curve because the storage erase circuit is robbing current from the storage gate. The rising voltage at the output of the storage erase circuit is the result of a charging capacitor. As the capacitor charges, the circuit takes less current until, finally, its charge path is cut off and the output of the storage gate stabilizes in its HI state. At the end of time period C, the pulse generator is enabled, the storage erase circuit is turned off, and the erase pulses are again coupled to the CRT storage mesh.

4-53. The output of the blanking gate is LO during time period B. This causes the blanking amplifier to apply the blanking signal (HI) to the gate amplifier. It also causes the deflector switch to apply —49 volts to one side of the x-axis amplifier. These actions assure that no electrons from the write gun will reach the target area of the CRT during the erase cycle.

4-54. DETAILED CIRCUIT THEORY.

4-55. The following paragraphs are intended as a guide to understanding the functioning of the instrument and are not a discussion of basic electronics. For instance, the text may state that a circuit functions as a Darlington amplifier and assume that the reader knows how a Darlington amplifier works. Unusual circuits will be explained in greater detail. The detailed circuit theory is keyed to the schematics located in Section VIII. A reference is made to the appropriate schematic at the pertinent point in each discussion. The indicated schematic may then be folded out for reference while reading the text.

4-56. LOW VOLTAGE POWER SUPPLIES.

4-57. The low voltage power supplies convert line voltages to four regulated dc voltages; +50 volts, —50 volts, +12.6 volts, and +158 volts. The low voltage power supplies consist of a primary power circuit, a secondary power circuit, and a regulator circuit for each of the dc outputs.

4-58. Primary Power. See schematic 1. Model 1331A can be operated from either 115 vac, or 230 vac (single phase, 48 to 440 hertz). LINE ON switch S1 applies power to the primary windings of transformer T1. SELECTOR switch S2 connects the two primaries in parallel for 115 vac operation or in series for 230 vac operation. Line fuse F1 prevents excessive current from damaging the instrument.

4-59. Secondary Power. See schematic 1. The ac voltage across each secondary winding is full-wave rectified by a bridge rectifier. The output of each rectifier is filtered and applied to a regulator. Transformer T1 also supplies 12 vac for LINE indicator DS1 and 6.3 vac for the CRT filament.

4-60. —50 Volt Regulator. See schematic 1. A sample of the output is selected at the rotor of A1R22. Any error is felt at the base of A1Q5 and compared with a reference voltage (developed by A1VR4) on the base of A1Q4. The difference is amplified and applied to the base of A1Q3. Series regulator Q2 is driven by A1Q3 in such a direction as to correct the error.

4-61. +50 Volt Regulator. See schematic 1. The +50 volt power supply is referenced to a sample of the —50 volt power supply at the base of A1Q2. A sample of the output of the +50 volt supply is compared to the reference voltage. The difference is amplified by A1Q2 and applied to the base of A1Q1. Series regulator Q1 is driven by A1Q1 in such a direction as to correct the error.

4-62. +158 Volt Regulator. See schematic 2. The +158 volt power supply is referenced to the —50 volt power supply at the base of A5Q2. Any error in the +158 volt power supply is compared to the reference voltage. The difference is amplified by A5Q2 and applied to the base of A5Q1. Series regulator Q3 is driven by A5Q1 in such a direction as to correct the error.

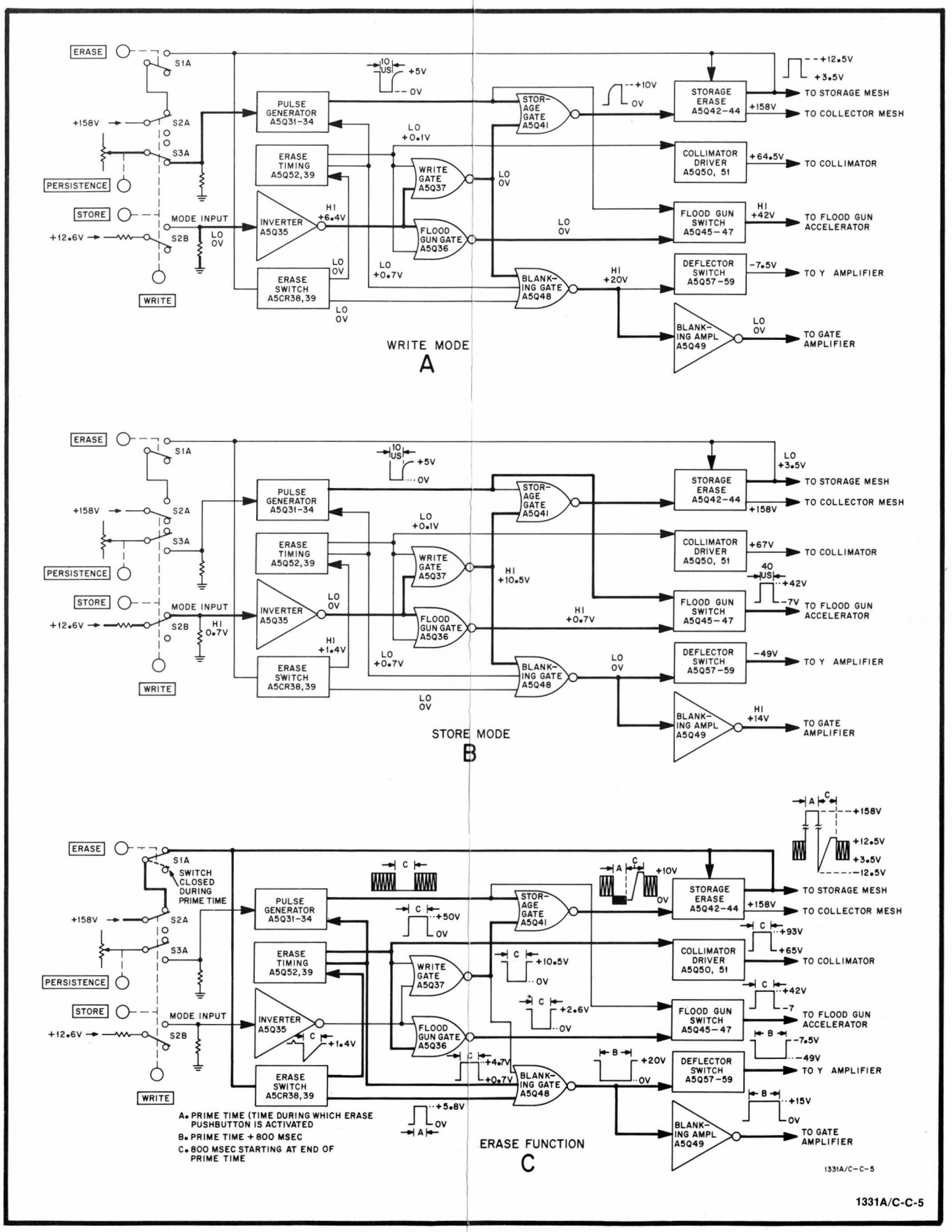

Figure 4-5. Pulse Circuits Block Diagram

4-63. +12.6 Regulator. See schematic 2. A sample of the output of the 12.6 volt power supply is selected and compared to a sample of the —50 volt power supply at the base of A5Q4. Any error (difference) is amplified by A5Q4 and applied to the base of A5Q3. Series regulator Q4 is driven by A5Q3 in such a direction as to correct the error.

4-64. HIGH VOLTAGE POWER SUPPLY.

4-65. See schematic 3. When the instrument is first turned on, Q5 starts to conduct through the primary winding of A4T1. Positive feedback to the base of Q5 occurs through the tertiary winding of A4T1 and the circuit oscillates at a rate determined by the distributed inductance and capacitance of the circuit. The conduction angle of Q5 (class C) and consequently the voltage of the output, is controlled by the voltage at the collector of A3Q2.

4-66. A sample of the +50 volt power supply (selected by A3R8) establishes a reference at the base of A3Q3. A sample of the —2915 volt output of the high voltage power supply is fed back to the base of A3Q3 and compared with the reference voltage. Any difference (error) is amplified by A3Q3 and A3Q2. The amplified difference drives the base of A3Q5 through the tertiary winding of A4T1 in such a direction as to correct the error.

4-67. The oscillations are stepped up by A4T1, rectified by A4CR1 and A4CR2, filtered by the R and C components on A4 and A3, and applied as operating potentials to the control grid and cathode of the CRT write gun.

4-68. The output of the gate amplifier is connected to the return side of the control grid supply. Any variations in the output of the gate amplifier, varies the total voltage on the control grid and controls the brightness of the CRT.

4-69. There are three inputs to the gate amplifier: from the INTENSITY potentiometer, from the z-axis amplifier (schematic 5), and from the intensity switch (A5Q48/A5Q49 on schematic 7). The inputs are summed and the composite signal drives the gate amplifier to control the brightness (or blanking) of the CRT. A3Q9 and A3Q10 form a complementary amplifier. A3Q7 and A3Q8 are drivers for A3Q9 and A3Q10 respectively.

4-70. A portion of the cathode supply is tripled by A7 and provides the potential for the CRT post accelerator.

4-71. X- AND Y-AXIS AMPLIFIERS.

4-72. See schematic 4. Because the x- and y-axis amplifiers are nearly identical, only the y-axis amplifier will be explained.

4-73. The input stage consists of two Darlington pairs (A5Q5A/A5Q7 and A5Q5B/A5Q8) connected as a differential emitter follower pair. This configuration provides the required high input impedance for the Y INPUT and the current drive for the following amplifiers.

4-74. Common emitter amplifier A5Q9/A5Q10 provides variable gain. Amplifier gain is controlled by adjusting vert gain potentiometer A5R38.

4-75. The output stage consists of two cascoded pairs (A5Q55A/Q14 and A5Q55B/Q15) connected as a differential pair with a common current source, A5Q13. This configuration provides the required differential drive for the vertical deflection plates of the CRT. Vertical position control is accomplished by changing the division of current through the two halves of the differential amplifier when VERT POSITION control R7 is adjusted. Compensation for phase shift (unequal output capacitance) between the x- and y-axis amplifiers is accomplished by adjusting phase shift adj A5C13. The current source for the amplifier is interrupted when BEAM FIND switch S3 is activated. This reduces the gain and output range of the x- and y-axis amplifiers to the point where the beam cannot be deflected off the CRT screen.

4-76. Z AXIS AMPLIFIER.

4-77. See schematic 5. The z-axis amplifier increases the input signal to a level capable of driving the intensity gate which, in turn, drives the CRT write gun control grid. The z-axis amplifier is a differential amplifier composed of A5Q53 and A5Q54. Zener diode A5VR8 limits the collector voltage of A5Q53 to 8.25 volts; this limits the power dissipated by A5Q53.

4-78. CONTROL CIRCUITS.

4-79. See schematic 6. The control circuits consist of the ERASE switch, the STORE switch, and the WRITE switch on switch assembly A8 and the store time adj circuits on program board A6.

4-80. The ERASE switch is a spring-return pushbutton switch. It will function only when the STORE switch is not activated. In WRITE mode, pressing the ERASE switch applies +158 volts to the erase timing and storage erase circuits on schematic 7. It also applies +158 volts to the storage mesh of the CRT.

4-81. The WRITE and STORE switches are pushbutton switches that are mechanically connected so that both cannot be activated at the same time. The WRITE switch, when activated, interrupts the operating current to the inverter, A5Q35, on schematic 7. The STORE switch, when deactivated, connects the PERSISTENCE control to the pulse generator on schematic 7. When activated, the STORE switch connects the store time adj control, A6R2, to the pulse generator.

4-82. PULSE CIRCUITS.

4-83. See schematic 7. Also refer to the voltages and waveforms on figure 4-5 and figures 8-21, -22, and -23. The pulse circuits control the storage and variable persistence elements in the CRT.

4-84. Pulse Generator. The pulse generator consists of current source A5Q31, relaxation oscillator A5Q32, and monostable multivibrator A5Q33/A5Q34. The current through A5Q31 is determined by either the PERSISTENCE control or by the store time adj control on schematic 6. Either of these controls, when set full counterclockwise, will reverse bias A5Q31 and disable the pulse generator. As either control is set more clockwise, A5Q31 conducts more current. This charges A5C24 faster and increases the pulse generator frequency as explained in the following paragraph.

4-85. When A5C24 charges to the firing point of unijunction transistor A5Q32, the transistor conducts, discharges A5C24, and generates a positive spike across A5R104. The spike triggers the monostable multivibrator. The monostable multivibrator generates a negative going pulse about 10 microseconds wide at the collector of A5Q33. When A5C24 discharges to 0 volt, A5Q32 turns off and A5C24 starts charging again to repeat the cycle.

4-86. Inverter. The inverter is a common emitter amplifier that functions as a logic inverter and as a transistor switch to control the flood gun gate (A5Q36) and the write gate (A5Q37).

4-87. Flood Gun Gate and Write Gate. The flood gun gate (A5Q36) and the write gate (A5Q37) are common emitter amplifiers that function as logic inverters and transistor switches to control the outputs of the pulse circuits. Two switches are required because some of the circuits need to be isolated from each other. Both gates function as negated OR (NOR) circuits because both can be activated from either of two inputs. Both have common inputs at the collector of A5Q35 and both have a common input at the junction of A5R113 and A5R114.

4-88. Erase Timing Circuit. The erase timing circuit consists of A5CR38, A5CR39, A5R123, and A5C35. The input to the erase timing circuit is at the anode of A5CR38 and its two outputs are to the base of A5Q48 and to the base of A5Q52. When +158 volts is applied from the ERASE switch on schematic 6, A5CR38 and A5CR39 turn on. The voltage at the junction of the two diodes rises from 0 volt to about +4.5 volts. This positive change is coupled through A5C55 to the base of A5C52 but it has no effect because A5C52 is already turned on. At the end of prime time (when the ERASE pushbutton is released), A5CR38 and A5CR39 turn off. The voltage at the junction of the two diodes drops to 0 volt. This negative change is coupled through A5C35, dropping the voltage at the base of A5Q52 toward —4.5 volts. Immediately, the capacitor starts charging through A5R123 towards +50 volts. The time required to charge A5C35 to +1.4 volts (turn on voltage for A5Q52 and A5Q39) is approximately 800 milliseconds. This is the basic timing for the erase cycle.

4-89. Erase Switch. The erase switch, A5Q52 and A5Q39, is a Darlington pair functioning as a transistor switch. The Darlington configuration permits a larger current to be switched with a small input current. Normally, both transistors are turned on and the collector of A5Q39 is clamped near 0 volt. When the negative going transition of the prime time pulse is coupled to the base of A5Q52, both transistors turn off until A5C35 charges back up to +1.4 volts. During this time, A5CR51 clamps the collector of A5Q39 to +50 volts. The collector of A5Q39 is one output of the erase switch. The other is at the other side of A5CR40. When A5Q39 is turned on, A5CR40 is turned on and its anode is clamped to +0.6 volts. When A5Q39 is turned off, A5CR40 turns off and its anode rises to +4.7 volts.

4-90. Blanking Gate. The blanking gate, A5Q48, is a common emitter amplifier that functions as a logic inverter and transistor switch. Because it can be controlled from any of three different inputs, it also functions as a three-input negated OR (NOR) gate. The three inputs are: the output of the erase timing circuit from the cathode of A5CR39, the output of the erase switch at the anode of A5CR40, and the output of the write gate from the collector of A4Q37. During write mode, all three of its inputs are LO and its output is HI. During store mode, the input from the write gate is HI and its output is LO. During the erase function, the input from the erase switch is HI during prime time and the input from the erase timing circuit is HI during the erase timing period; consequently, the output is LO during the entire erase function.

4-91. Storage Gate. The storage gate, A5Q41, is a common emitter amplifier functioning as a transistor switch and logic inverter. Because it is activated from either of two inputs, it also functions as a negated OR (NOR) logic gate. The two inputs are: from the pulse generator at the collector of A5Q33, and from the write gate at the collector of A5Q37. In write mode, the input from the write gate is LO and the pulses from the pulse generator turn the gate on and off so that the output is a train of pulses. In store mode, the output from the write gate is HI and the output is clamped LO. During the erase timing period (800 milliseconds), both inputs are LO and the output tends to go HI, but the change is an RC curve because current is being drawn by the storage erase circuit.

4-92. Storage Erase Circuit. The storage erase circuit consists of switch A5Q42 and Darlington pair

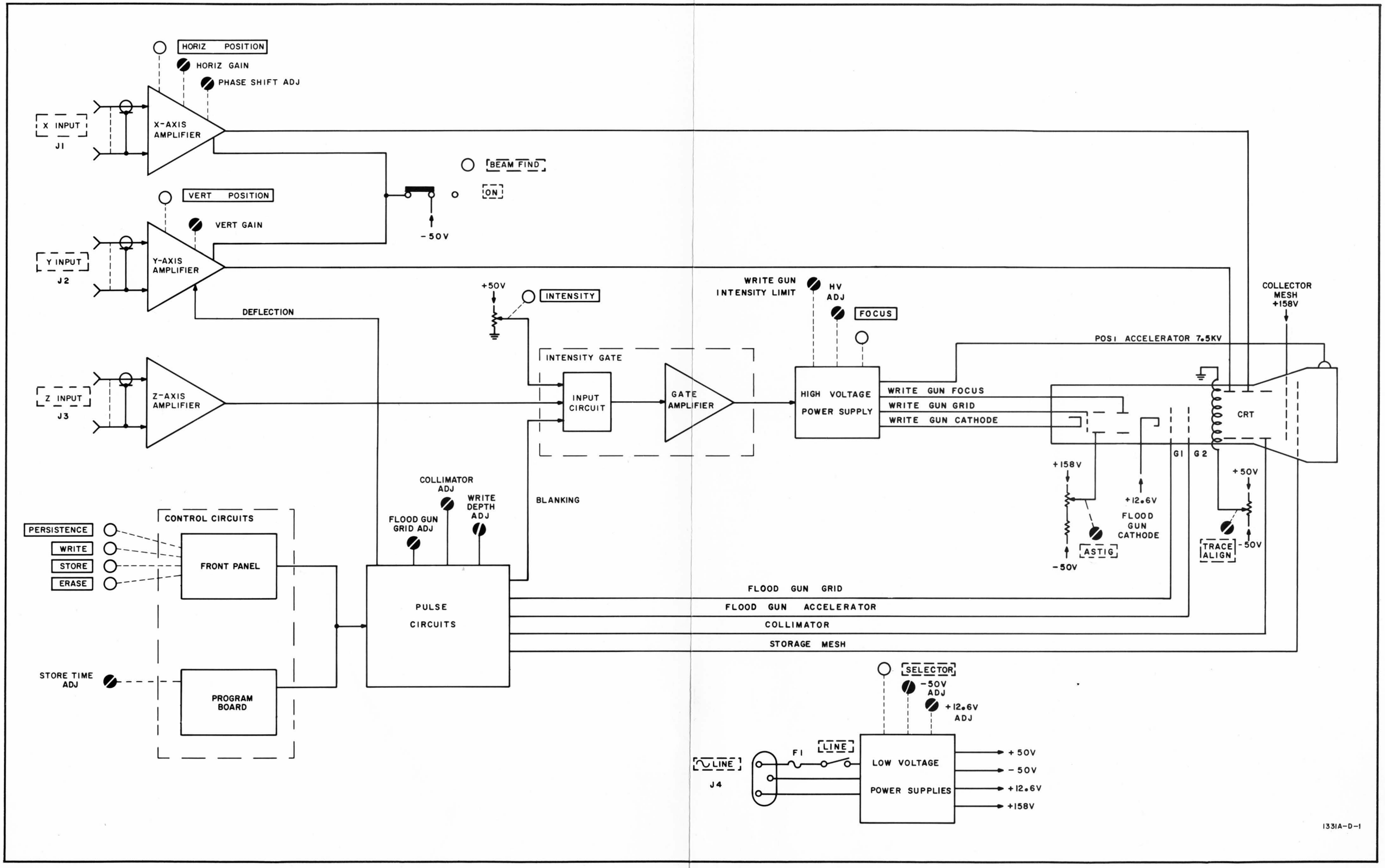

Figure 4-6.
Overall Block Diagram

A5Q43/A5Q44. In write and store modes, A5Q42, A5Q43, A5Q44, and A5CR42 are all turned off. The The waveform at the collector of A5Q41 is applied to the CRT storage mesh. When the ERASE pushbutton is pressed, +158 volts is applied to the base of A5Q42. A5Q42 and A5CR52 turn on, discharging A5C37. This causes A5Q43, A5Q44, and A5CR42 to turn on, clamping the diode juntion (A5CR41, A5CR42, and A5CR43) to about —14 volts. At this time, A5CR43 is turned off because +158 volts is applied to the storage mesh. When the ERASE pushbutton is released, +158V is removed from A5R138 allowing A5Q42 and A5CR52 to turn off. A5C37 begins to charge toward the +158 supply through A5R141. The rising voltage is coupled to the junction of A5CR43 and A5R136 through the Darlington emitter follower, A5Q43/A5Q44 (A5CR42 and A5CR43 are biased on). Finally the charge across A5C37 rises to back bias A5Q43; the Darlington pair and A5CR42 turn off, clamping the voltage at the diode junction at about +14 volts with the output following one junction drop lower. At the end of the erase timing period, the pulse generator is enabled, the storage gate is enabled and the erase pulses are again applied to the CRT storage mesh.

4-93. Collimator Driver. The collimator driver consists of common emitter amplifier A5Q51 and emitter follower A5Q50. The purpose of the collimator in the CRT is to shape the flood electrons so that they arrive at the storage mesh in parallel paths perpendicular to the storage surface. The first function of the collimator driver is to permit accurate and stable application of the precise collimator voltage for best collimation. During the erase function, because the collector mesh is placed in the path of the flood electrons, there will be areas on the storage surface behind the collector mesh where complete erasure will not take place because the flood electrons are deflected by the collector mesh. The second function of the collimator driver is to cause undercollimation during the erase function. This causes the flood electrons to arrive at the storage surface at an angle where they can flood those areas on the storage surface normally shaded by the collector mesh. When the output from the erase switch goes HI, it causes the output of the collimator driver to rise from +65 volts to +93 volts during the erase timing period.

4-94. Flood Gun Switch. The flood gun switch consists of common emitter amplifier A5Q45, amplifier/switch A5Q46, and emitter follower A5Q47. When the input to A5Q46 from the flood gun gate is HI (A5Q36 turned off), the entire circuit functions as an amplifier and applies pulses to the flood gun accelerator. When A5Q36 is turned on, the base of A5Q46 is grounded. This grounds the output of A5Q45 and turns A5Q46 off. The output of A5Q47 goes HI and the flood gun accelerator is turned on constantly.

4-95. Deflector Switch. The deflector switch, consisting of A5Q57, A5Q58, and A5Q59, is a circuit designed to cause a large voltage change at its output. Normally, A5Q57 is turned on and A5Q58 and A5Q59 are turned off. The voltage on the collector of A5Q59 is the normal voltage from its connecting point on the y-axis amplifier (schematic 4). Any time a blanking command is applied to the blanking amplifier, the command is also applied to the deflector switch. A5Q57 turns off and A5Q58 and A5Q59 turn on. This applies —49 volts to one side of the y-axis amplifier, unbalancing it and causing any electrons from the write gun to be deflected away from the target area of the CRT. This prevents stored images from being degraded by spurious emissions from the write gun.

4-96. Blanking Amplifier. The blanking amplifier consists of common emitter amplifier A5Q49. Its only function is to invert the blanking command.

4-97. Unused Circuitry. Main Assembly A5 (pulse circuits) is used in other Hewlett-Packard instruments. There are some circuits shown on schematic 7 that have no function in Model 1331A. Relay driver A5Q40 and relay A5K1 are not used. A5Q38 and associated components has no effect on Model 1331A although it functions as designed. Its purpose, when installed in the instrument for which it was designed, is to cause a 15 to 30 microsecond delay between the LO output of the write gate and the application of the LO to the storage gate.

SECTION V

PERFORMANCE CHECKS AND ADJUSTMENTS

5-1. INTRODUCTION.

5-2. This section contains step-by-step procedures for checking Model 1331A specifications as shown in Section I of this manual. A table (performance check record) is provided at the end of the performance checks for recording the measurements taken during the first running of the procedure. The procedures for making all internal adjustments are covered following the performance check procedures. A photograph showing the locations of all adjustment controls is located at the end of this section.

5-3. The procedures assume that the instrument will perform as specified. Should there be a failure to obtain the desired result during either the checkout procedures or the adjustment procedures, the cause should be found and corrected before proceeding further. Refer to the instructions on troubleshooting in Section VIII of this manual.

5-4. Test equipment required for procedures in this section is listed in table 5-1. Test equipment equivalent to that recommended may be substituted, provided it has the required characteristics listed in the table. For best results, use recently calibrated test equipment.

5-5. PERFORMANCE CHECK.

5-6. The following paragraphs describe procedures to determine if the instrument meets the specifications listed in the specification table located in Section I. These procedures can be used as part of an incoming inspection, as a periodic operational test, or to check calibration after repairs or adjustments have been made. Any one of the following checks can be made separately, if desired.

5-7. The first time the performance checks are made, enter the results on the performance check record.

Table 5-1. Recommended Test Equipment

Instrument Type	Recommended Model	Required Characteristics	Required For
Oscilloscope	HP 140A		
Vertical Amplifier	HP 1420A	1V/div, 70-ns risetime	Performance checks Adjustments
Time Base	HP 1402A	dc to 100 kHz	
Digital Voltmeter	HP 3439A with 3444A plug-in	-50V to +158V, 0.05%	Adjustments
Sine Wave Generator	HP 651B	10 Hz to 5 MHz, 3V p-p	Performance checks Adjustments
Square Wave Generator	HP 211B	1000 Hz, 1V p-p	Adjustments
Pulse Generator	HP 8004A	250 Hz to 500 kHz, 1 usec pulse width, ±2V p-p amplitude, 2V offset	Performance checks Adjustments
Oscillator	HP 204C	5 Hz to 500 kHz, 3V p-p	Performance checks Adjustments
1000:1 Divider Probe	HP K05-3440A	Divide ratio: 1000:1 Accuracy: ±3%	Adjustments
50:1 Divider Probe	HP 10002A	2.5 pF capacitance	Performance checks Adjustments

Remove the record and file it for future reference. Be sure to enter the instrument serial number on the record for identification.

5-8. MODE AND ERASE CHECKS.

5-9. Specification. Model 1331A shall operate in write and store modes. The erase function shall completely obliterate any display in write mode. The erase function shall have no effect in store mode.

5-10. Equipment.

None.

5-11. Procedure.

a. Set Model 1331A controls as follows:

STORE ..... in
INTENSITY ..... ccw
PERSISTENCE ..... ccw
POSITION (HORIZ and VERT) .... centered

b. Turn INTENSITY cw, then ccw. No display dot shall appear on CRT.

c. Press WRITE pushbutton.

d. Turn INTENSITY cw until display dot appears.

e. Use HORIZ and VERT POSITION CONTROLS to move dot all around CRT. Dot shall leave bright trace that slowly fades.

f. Repeat step e and immediately press STORE pushbutton. Trace shall remain on CRT for at least 15 minutes with no discernable degradation, except for small amount of allowable degradation on outside 0.5 div of viewing area.

g. Press and release ERASE PUSHBUTTON. There shall be no effect on display.

h. Press WRITE pushbutton.

i. Repeat step e and immediately press ERASE pushbutton. Display shall be completely erased.

5-12. DEFLECTION CHECKS.

NOTE

The deflection checks apply to instruments whose input attenuators have not been modified as described in Section II.

5-13. Specification. A 1V p-p signal at the X INPUT shall cause a 10-div (±3%) horizontal deflection on the CRT. A 1V p-p signal at the Y INPUT shall cause an 8-div (±3%) vertical deflection.

5-14. Equipment.

Square wave generator.

5-15. Procedure.

a. Set Model 1331A controls as follows:

WRITE ..... in
INTENSITY ..... as required
PERSISTENCE ..... ccw
POSITION (HORIZ and VERT) .... centered

b. Connect 1-kHz 1V p-p square wave from square wave generator to X INPUT. CRT deflection shall be 10 div ±0.3 div.

c. Move output of square wave generator to Y INPUT. CRT deflection shall be 8 div ±0.24 div.

d. If necessary, perform gain adjustment (paragraph 5-67).

5-16. PHASE SHIFT CHECK.

5-17. Specification. Phase shift between the x- and y-axis amplifiers shall be less than 1 degree at 500 kHz.

5-18. Equipment.

Sine wave generator.

5-19. Procedure.

a. Set Model 1331A controls as follows:

WRITE ..... in
INTENSITY ..... as required
PERSISTENCE ..... ccw
POSITION (HORIZ and VERT) .... centered

b. Apply 500 kHz, 1V p-p sine wave from output of sine wave generator to both X INPUT and Y INPUT. Separation of resultant ellipse at center screen shall not exceed 1.2 minor div (see figure 5-1).

c. If necessary perform phase shift adjustment (paragraph 5-71).

5-20. COMMON MODE REJECTION RATIO (CMRR) CHECK.

5-21. Specification. The rejection ratio of the x- and y-axis amplifiers shall be at least 40 dB for a common-mode differential-input signal equal to or less than 3V p-p with frequency equal to or less than 10 kHz.

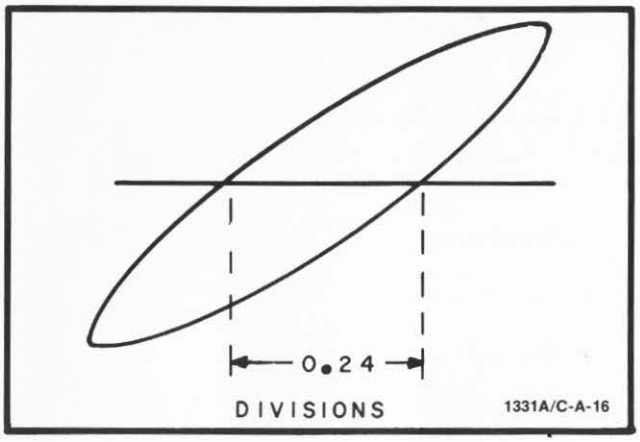

Figure 5-1. Phase Shift Trace

Note

Specification applies only to instruments connected for differential input. Refer to Section II.

5-22. Equipment.

a. Sine wave generator.

b. Oscilloscope.

5-23. Procedure.

a. Set Model 1331A controls as follows:

WRITE ..... in
INTENSITY ..... as required
PERSISTENCE ..... ccw
POSITION (HORIZ and VERT) .... centered

b. Place shorting connector on X INPUT.

c. Apply 10-kHz output of sine wave generator between shorting connector and chassis. Monitor with oscilloscope and adjust amplitude to 3V p-p.

d. Observe horizontal deflection on CRT. Deflection shall be equal to or less than 1.5 minor div.

e. Move shorting connector and output of sine wave generator to Y INPUT.

f. Observe vertical deflection on CRT. Deflection shall be equal to or less than 1.2 minor div.

5-24. BANDWIDTH CHECKS.

5-25. Specification. Bandwidth of both the x- and y-axis amplifiers shall be down not more than 3 dB at 1 MHz.

5-26. Equipment.

a. Sine wave generator.

b. Oscilloscope.

5-27. Procedure.

a. Set Model 1331A controls as follows:

WRITE ..... in
INTENSITY ..... as required
PERSISTENCE ..... ccw
POSITION (HORIZ and VERT) .... centered

b. Apply 10-kHz output of sine wave generator to X INPUT. Adjust amplitude for 10-div deflection on CRT.

c. Using oscilloscope, measure and note amplitude of sine wave at INPUT.

d. Change frequency of sine wave generator to 1 MHz.

e. Adjust amplitude at INPUT to match that noted in step c.

f. Observe deflection on CRT. Deflection shall equal or exceed 7.07 div.

g. Change output of sine wave generator to Y INPUT. Adjust amplitude for 8-div deflection on CRT.

h. Repeat steps c, d, and e.

i. Observe deflection on CRT. Deflection shall equal or exceed 5.65 div.

5-28. Z-AXIS AMPLIFIER CHECKS.

5-29. Specification. Risetime of the Z-axis amplifier shall be equal to or less than 70 ns. Bandwidth shall be equal to or greater than 5 MHz. The CRT shall be blanked by a voltage equal to or less negative than —1V at the Z INPUT. The CRT shall be driven to maximum brightness by a voltage equal to or less than 1V at the Z INPUT.

5-30. Equipment.

a. Pulse generator.

b. Oscilloscope.

c. Sine wave generator.

d. 50:1 divider probe.

5-31. Procedure.

a. Turn LINE switch to off.

b. Disable high voltage power supply by disconnecting collector lead to Q5 (blue wire to A3).

c. Turn LINE switch to ON.

d. Set Model 1331A controls as follows:

STORE ..... in
INTENSITY ..... ccw
PERSISTENCE ..... ccw
POSITION (HORIZ and VERT) .... centered

e. Set pulse generator controls as follows:

repetition rate ..... 50 kHz
pulse width ..... 1 usec
pulse polarity ..... positive
pulse amplitude ..... <0.25V p-p

f. Apply output of pulse generator to Z INPUT.

g. Use 50:1 divider probe to connect oscilloscope to intensity gate output (collector of A3Q10).

h. Increase output of pulse generator until intensity gate output (as monitored on oscilloscope) is maximum. Amplitude of pulse generator output shall be equal to or less than 1V p-p.

i. Reduce amplitude of pulse generator output until amplitude of intensity gate is just below clipping. Risetime and falltime of intensity gate output pulse shall be equal to or less than 70 ns, with leading edge overshoot equal to or less than 0.75V.

j. Set INTENSITY fully cw.

k. Set polarity of pulse generator output to negative.

l. Adjust amplitude of pulse generator output until negative excursion of pulse at intensity gate output just clamps. Amplitude of pulse generator output shall be equal to or less than 1V p-p.

m. Disconnect pulse generator from Z INPUT.

n. Apply 50-kHz, 0.25V p-p sine wave from sine wave generator to Z INPUT.

o. Adjust amplitude of sine wave output and front panel INTENSITY control to obtain sine wave at intensity gate output that is of maximum amplitude with no clipping at top or bottom. Note amplitude of intensity gate output.

p. Increase frequency of sine wave generator output until amplitude of sine wave at intensity gate output drops to 70.7% of amplitude noted in step o. Frequency shall be equal to or greater than 5 MHz.

q. Turn Model 1331A off and reconnect collector of Q5 to A3.

r. If necessary, perform z-axis amplifier risetime adjustment (paragraph 5-83).

5-32. ERASE TIME CHECK.

5-33. Specification. The erase function of Model 1331A can be accomplished in less than 1 second. This is assured by verifying that the erase cycle (T on figure 5-2) is less than 850 milliseconds.

5-34. Equipment.

a. Oscilloscope.

b. Pulse generator.

5-35. Procedure.

a. Set Model 1331A controls as follows:

WRITE ..... in
INTENSITY ..... ccw
PERSISTENCE ..... ccw
POSITION (HORIZ and VERT) .... centered

b. Connect oscilloscope to CRT storage mesh (white-yellow-violet wire on A5).

c. Press and release (quickly) ERASE pushbutton. Observe waveform similar to figure 5-2. T shall be equal to or less than 850 msec.

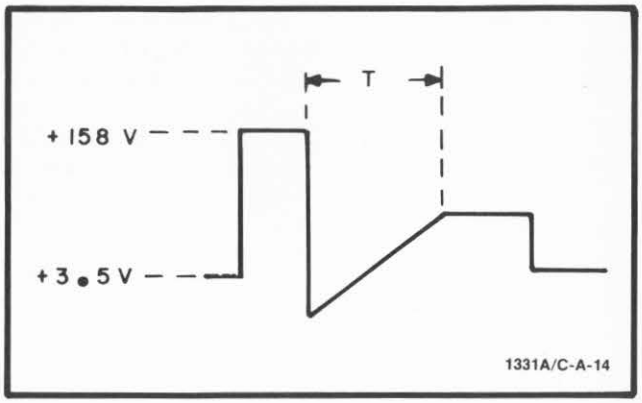

Figure 5-2. Erase Waveform

5-36. DOT WRITING TIME CHECK.

5-37. Specification. Dot writing time shall be equal to or less than 4 microseconds. This is assured by applying a 4 microsecond pulse to the X INPUT and noting that dots are written during pulse application time.

5-38. Equipment.

a. Sine wave generator.

b. Oscillator.

c. Pulse generator.

5-39. Procedure.

a. Set Model 1331A controls as follows:

WRITE	in
INTENSITY	ccw
PERSISTENCE	cw
POSITION (HORIZ and VERT)	centered

b. Apply 70-Hz, 1V p-p sine wave from sine wave generator to X INPUT.

c. Apply 1-Hz, 1V p-p sine wave from oscillator to Y INPUT.

d. Set pulse generator controls as follows:

repetition rate	1000 Hz
pulse width	4 us
pulse amplitude	1V
Pulse polarity	negative

e. Connect output of pulse generator to Z INPUT.

f. Press and release ERASE pushbutton.

g. Momentarily switch pulse amplitude to positive, then back to negative. Dots shall be written over entire CRT viewing area. A small amount of degradation is permissible in the outer 0.5 division of graticule.

h. If necessary, perform writing rate adjustment (paragraph 5-75).

5-40. STORE TIME CHECK.

5-41. Specification. Any pattern stored shall remain without discernible degradation for at least 15 minutes, except for a small amount of permissible degradation in outer 0.5 division of viewing area.

5-42. Equipment.

Oscillator.

5-43. Procedure.

a. Set Model 1331A controls as follows:

WRITE	in
INTENSITY	as required
PERSISTENCE	cw
POSITION (HORIZ and VERT)	centered

b. Connect 5-Hz, 1V p-p sine wave from oscillator to Y INPUT.

c. Using POSITION controls, center trace vertically and position it horizontally just off CRT viewing area.

d. Press and release ERASE pushbutton.

e. Using HORIZ POSITION control, sweep trace completely across CRT viewing area. Trace shall remain visible at least 60 seconds.

f. Repeat steps c, d, and e. Immediately press STORE pushbutton and note condition of trace.

g. Wait 15 minutes, then observe trace. Trace shall be as noted in step f with no positive or negative fade. A small amount of degradation is permissible in the outer 0.5 division of the graticule.

h. If necessary, perform store time adjustment (paragraph 5-79).

PERFORMANCE CHECK RECORD

1331A

Instrument Serial Number _____ **Date** _____

Check	Specification	Measured
MODE AND ERASE		
Write	Bright display	_____
Store	⩾15 minutes	_____
Erase		
write mode	Erases	_____
store mode	No effect	_____
DEFLECTION		
x-axis	10 ±0.3 div	_____
y-axis	10 ±0.24 div	_____
PHASE SHIFT		
Trace separation	⩽1.2 minor div	_____
COMMON MODE REJECTION RATIO (CMRR)		
x-axis amplifier	⩽1.5 minor div	_____
y-axis amplifier	⩽1.2 minor div	_____
BANDWIDTH		
x-axis amplifier	⩾7.07 div	_____
y-axis amplifier	⩾5.65 div	_____
Z-AXIS AMPLIFIER		
Maximum	⩽1V p-p	_____
Risetime and falltime	70 ns	_____
Minimum	⩽1V p-p	_____
Bandwidth	5 MHz	_____
ERASE TIME		
Erase cycle	⩽850 msec	_____
DOT WRITING TIME		
Z INPUT pulse width	⩽4 usec	_____
STORE TIME		
Pattern stored	⩾15 minutes	_____

Table 5-2. Low Voltage Power Supply Adjustments

Voltage	Ripple	Test Point	Adjustment
—50 ±0.02V	<2 mV p-p	A5J1-4	A1R22
+50 ±1V	<2 mV p-p	A5J1-2	none
+158 ±4V	<50 mV p-p	Q3-E (red lead)	none
+12.6 ±0.1V	<1.5 mV p-p	Q4-E (black lead)	A5R18A

5-44. ADJUSTMENT.

5-45. The following paragraphs describe procedures to calibrate Model 1331A so that it will perform as specified in Section I. For complete calibration, the entire adjustment procedure should be followed in sequence; individual adjustments can be made by following the steps outlined in the appropriate paragraphs. Adjustment controls are shown on a fold-out illustration at the end of this section.

5-46. Use a nonmetallic screwdriver and recently calibrated test equipment with characteristics as specified in table 5-1. After adjustments are complete, check instrument performance by accomplishing the performance checks described earlier in this section.

NOTE

The following adjustment procedures are for instruments whose input attenuators have not been modified as described in Section II. Refer to paragraph 5-87 for instructions on calibration of modified instruments.

5-47. LOW VOLTAGE POWER SUPPLY ADJUSTMENTS.

5-48. Reference. Schematics 1 and 2, tables 5-1 and 5-2, and figure 5-4.

5-49. Equipment.

Digital voltmeter.

5-50. Procedure. Make voltage adjustments and checks as shown in table 5-2. Make —50V adjustment first because other outputs are referenced to —50 volt power supply.

5-51. HIGH VOLTAGE POWER SUPPLY ADJUSTMENT.

5-52. Reference. Schematic 3, table 5-1, and figure 5-4.

5-53. Equipment.

a. Digital voltmeter.

b. 1000:1 divider probe.

5-54. Procedure.

a. Monitor —50V power supply using 1000:1 divider probe and digital voltmeter.

b. Multiply voltage reading from step a by 58.3.

c. Monitor output of high voltage power supply (yellow wire on A3).

d. Adjust hv adj A3R8 to achieve voltage reading equal to result obtained in step b.

5-55. WRITE DEPTH ADJUSTMENT.

5-56. Reference. Schematic 7, table 5-1, figure 5-3, and figure 5-4.

5-57. Equipment.

Oscilloscope.

5-58. Procedure.

a. Set Model 1331A controls as follows:

WRITE ..... in
INTENSITY ..... ccw
PERSISTENCE ..... ccw
POSITION (HORIZ and VERT) .... centered

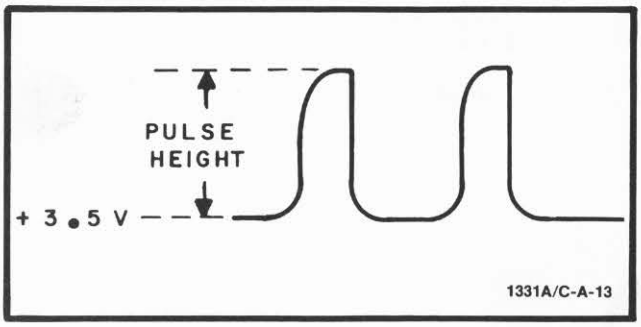

Figure 5-3. Write Depth Waveform

b. Verify that bright dot does not appear on CRT.

c. Connect oscilloscope to CRT storage mesh (white-yellow-violet wire on A5).

d. Note waveform similar to figure 5-3. Set write depth adj A5R18B for pulse height of approximately 9.5V p-p.

5-59. FLOOD GUN AND COLLIMATOR ADJUSTMENTS.

5-60. Reference. Schematic 7, table 5-1, and figure 5-4.

5-61. Equipment.

None.

5-62. Procedure.

a. Set Model 1331A controls as follows:

WRITE ..... in
INTENSITY ..... as required
PERSISTENCE..... ccw
POSITION (HORIZ and VERT).... centered

b. Set collimator adj A5R18D to overcollimate; that is, make background illumination smaller than CRT viewing area and generally rectangular.

c. Set flood gun grid adj A5R18C for brightest background illumination without dimming corners or edges.

d. Set collimator adj A5R18D to exact point where pattern edge just touches graticule perimeter (one or more corners may extend beyond perimeter). Ignore dimples at center top and bottom of graticule.

e. Repeat steps a and d several times to obtain greatest and most uniform brightness over entire viewing area.

5-63. WRITE GUN INTENSITY LIMIT ADJUSTMENT.

5-64. Reference. Schematic 3, table 5-1, and figure 5-4.

5-65. Equipment.

Digital voltmeter.

5-66. Procedure.

a. Set Model 1331A controls as follows:

WRITE ..... in
INTENSITY ..... 10 o'clock
PERSISTENCE..... ccw
POSITION (HORIZ and VERT).... centered

WARNING

The write gun intensity limit adjustment is in a high voltage circuit and must be adjusted with an insulated tool.

b. Set write gun intensity limit A3R11 fully cw.

CAUTION

Do not permit spot to bloom during following adjustments; CRT damage may result.

c. Connect digital voltmeter to junction of A3R23 and A3C12.

d. Set INTENSITY for indication of +7V on digital voltmeter.

e. Observe CRT. Set write gun intensity limit A3R11 to point where spot just becomes visible on CRT; then back down until spot just disappears.

5-67. X— AND Y—AXIS AMPLIFIER GAIN ADJUSTMENT.

5-68. Reference. Schematic 4, table 5-1, and figure 5-4.

5-69. Equipment.

Square wave generator.

5-70. Procedure.

a. Set Model 1331A controls as follows:

WRITE ..... in
INTENSITY ..... as required
PERSISTENCE..... ccw
POSITION (HORIZ and VERT).... centered

b. Apply 1-kHz, 1V p-p square wave from square wave generator to X INPUT.

c. Set horiz gain A5R71 for exactly 10 div horizontal deflection on CRT.

d. Move output of square wave generator to Y INPUT.

e. Set vert gain A5R38 for exactly 8 div vertical deflection on CRT.

5-71. PHASE SHIFT ADJUSTMENT.

5-72. Reference. Schematic 4, table 5-1, and figure 5-4.

5-73. Equipment.

Sine wave generator.

5-74. Procedure.

a. Set Model 1331A controls as follows:

WRITE	in
INTENSITY	as required
PERSISTENCE	ccw
POSITION (HORIZ and VERT(	centered

b. Connect 500 kHz, 1V p-p output of sine wave generator to both X INPUT and Y INPUT.

c. Set phase shift adj A5C13 to minimize opening at center of resultant ellipse.

5-75. WRITING RATE ADJUSTMENT.

5-76. Reference. Schematic 7, table 5-1, and figure 5-4.

5-77. Equipment.

a. Sine wave generator.

b. Oscillator.

c. Pulse generator.

d. Oscilloscope.

5-78. Procedure.

a. Set Model 1331A controls as follows:

WRITE	in
INTENSITY	as required
PERSISTENCE	cw
POSITION (HORIZ and VERT)	centered

b. Connect 70-Hz, 1V p-p sine wave from sine wave generator to X INPUT.

c. Connect 5-Hz, 1V p-p sine wave from oscillator to Y INPUT.

d. Set pulse generator controls as follows:

repetition rate	100 Hz
pulse width	4 usec
pulse amplitude	1V
pulse polarity	positive

e. Apply output of pulse generator to Z INPUT.

f. Connect oscilloscope to intensity gate output (collector of A3Q10).

g. Turn INTENSITY cw until amplitude of intensity gate output pulse is maximum.

h. Change pulse polarity to negative.

i. Press and release ERASE pushbutton.

j. Momentarily switch pulse polarity to positive; then back to negative. Resultant dot pattern on CRT should be uniform over entire graticule area except for a small amount of allowable degradation on outer 0.5 division.

k. If pattern is not uniform, set write depth adj A5R18B slightly ccw.

l. Press and release ERASE pushbutton; then repeat step j.

m. If writing is uniform, press and release ERASE pushbutton.

n. If erasure is not complete after single erase cycle, set write depth adj A5R18B slightly cw.

o. Repeat steps j through n until most uniform writing characteristics along with best erase characteristics are achieved.

5-79. STORE TIME ADJUSTMENT.

5-80. Reference. Schematics 6 and 7, table 5-1, and figure 5-4.

5-81. Equipment.

a. Sine wave generator.

b. Oscillator.

c. Pulse generator.

d. Oscilloscope.

5-82. Procedure.

a. Set Model 1331A controls as follows:

WRITE	in
INTENSITY	ccw
PERSISTENCE	cw
POSITION (HORIZ and VERT)	centered

b. Apply 70-Hz, 1V p-p sine wave from sine wave generator to X INPUT.

c. Apply 5-Hz, 1V p-p sine wave from oscillator to Y INPUT.

d. Set pulse generator controls as follows:

repetition rate	1000 Hz
pulse width	4 usec
pulse amplitude	1V
pulse polarity	positive

e. Apply output of pulse generator to Z INPUT.

f. Connect oscilloscope to flood gun accelerator (white-black-blue wire on A5).

g. Press STORE pushbutton.

h. Set store time adj A6R2 for 10% duty cycle on flood gun accelerator (pulse-on time one tenth of pulse-off time).

NOTE

A higher duty cycle can be used to increase brightness, but store time may be degraded.

i. Change pulse polarity to negative; press and release ERASE pushbutton.

j. Momentarily change pulse polarity to positive; then back to negative and immediately press STORE pushbutton.

k. Wait 15 minutes. Observe that dot pattern as written in step j is visible over entire CRT viewing area except for small amount of allowable degradation on outer 0.5 div, and has not faded positive or negative.

(1) Fades positive: repeat writing rate adjustment procedure (paragraph 5-75) by adjusting write depth adj A5R18B slightly cw. Then repeat store time adjustment procedure.

(2) Fades negative: Repeat writing rate adjustment procedure (paragraph 5-75) by adjusting write depth adj A5R18B slightly ccw. Then repeat store time adjustment procedure.

5-83. Z-AXIS AMPLIFIER RISETIME ADJUSTMENT.

5-84. Reference. Schematic 7, table 5-1, and figure 5-4.

5-85. Equipment.

a. Pulse generator.

b. Oscilloscope.

c. Sine wave generator.

d. 50:1 divider probe.

5-86. Procedure.

a. Turn LINE switch to off.

b. Disable high voltage power supply by disconnecting collector lead to Q5 (bluw wire to A3).

c. Set LINE switch to ON.

d. Set Model 1331A controls as follows:

STORE	in
INTENSITY	ccw
PERSISTENCE	ccw
POSITION (HORIZ and VERT)	centered

e. Set pulse generator controls as follows:

repetition rate	500 kHz
pulse width	1 usec
pulse polarity	positive
pulse amplitude	<0.25V p-p

f. Apply output of pulse generator to Z INPUT.

g. Use 50:1 divider probe to connect oscilloscope to intensity gate output (collector of A3Q10).

h. Increase output of pulse generator until intensity gate output (as monitored on oscilloscope) is 25V p-p.

i. Set intensity gate bandwidth adj A3C19 so that risetime of intensity gate output is less than 70 ns and overshoot is less than 0.75V.

5-87. CALIBRATING MODIFIED INSTRUMENTS.

5-88. The following procedures are provided as a guide to the calibration of instruments that have been modified according to the instructions in Section II. The procedures are general in nature because of the large number of input attenuator combinations possible.

5-89. PHASE SHIFT.

5-90. Bypass the attenuators and perform the phase shift adjustment of paragraph 5-71. Perform the compensation adjustments described in paragraph 5-91. Check phase shift again with attenuators in the circuit. If necessary, make small compromising adjustments of the attenuators, dividing the adjustments as evenly as possible between x and y.

5-91. ATTENUATOR COMPENSATION.

5-92. In order to maintain the frequency response characteristics of Model 1331A, it is necessary to com-

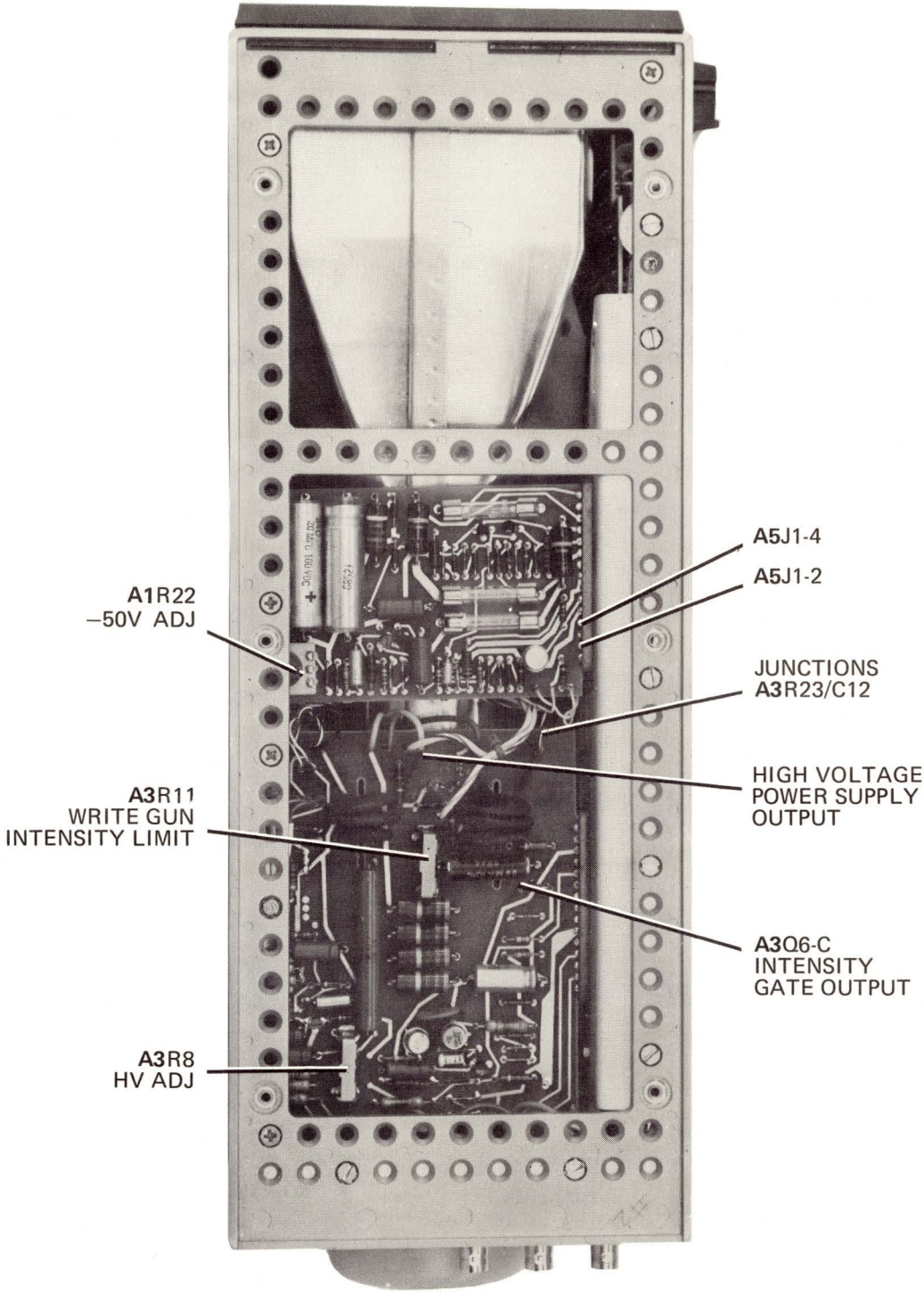
A5J1-4
A5J1-2
A1R22
–50V ADJ
JUNCTIONS
A3R23/C12
HIGH VOLTAGE
POWER SUPPLY
OUTPUT
A3R11
WRITE GUN
INTENSITY LIMIT
A3Q6-C
INTENSITY
GATE OUTPUT
A3R8
HV ADJ

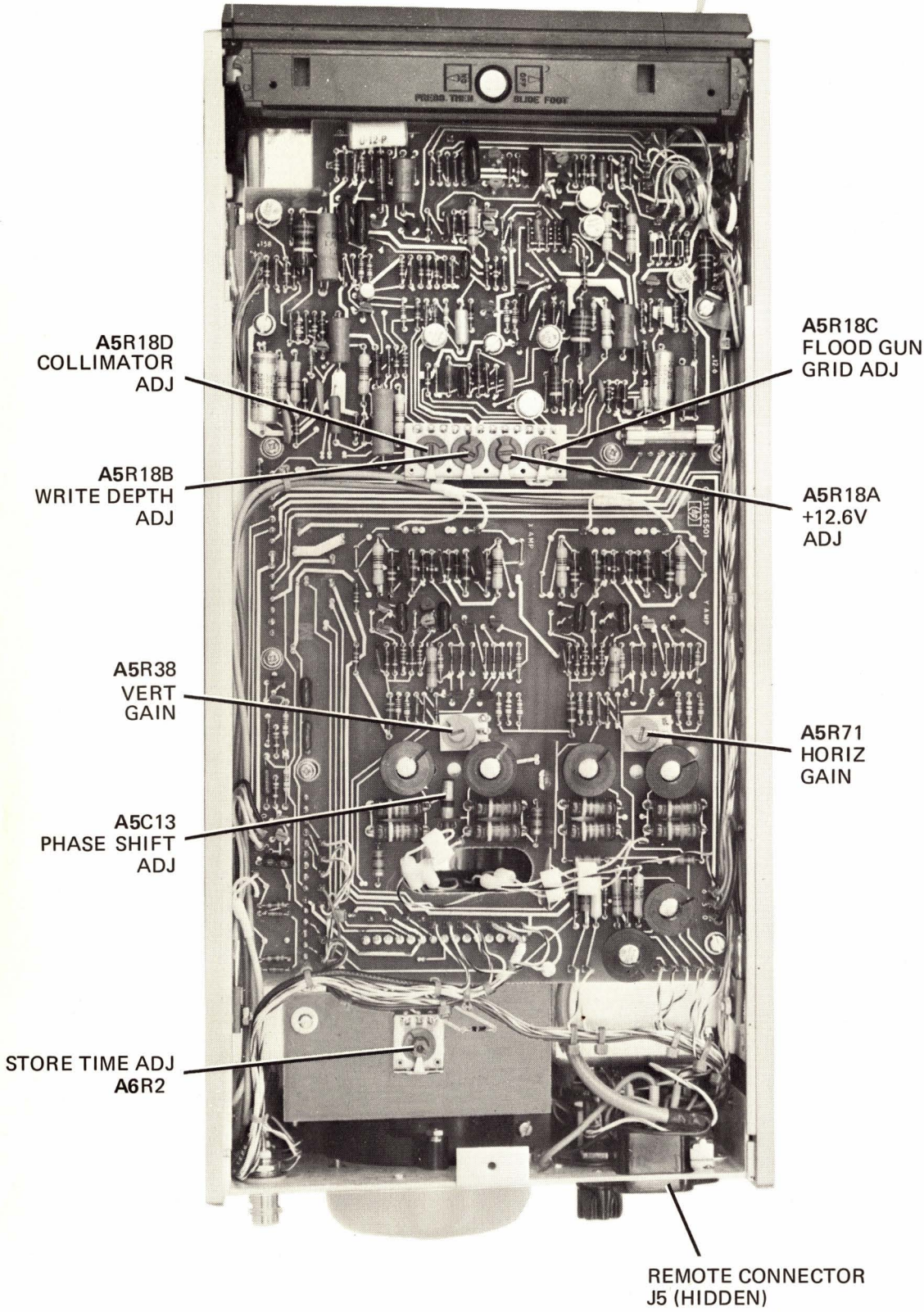

Figure 5-4.
Adjustment Locator
5-11/5-12

pensate any added attenuators. This can be done by applying a 1 kHz square wave of appropriate amplitude to each added attenuator and adjusting the series capacitance to minimize the distortion at the maximum voltage excursion end of the deflection on the CRT. If a sawtooth generator is available, its output can be applied to the opposite amplifier to display a square wave on the CRT. In that case, adjust the series capacitance to obtain the flattest possible top to the square wave.

5-93. INPUT SIGNAL AMPLITUDES.

5-94. After phase shift and attenuator compensation have been accomplished, the remaining adjustments can be made by modifying the amplitudes of the signals given in the adjustment procedures. For instance, if the adjustment procedure calls for a 1V p-p signal and the attenuation ratio of the added attenuator is 3:1, then the amplitude of the input signal should be changed to 3V p-p.

SECTION VI

REPLACEABLE PARTS

6-1. INTRODUCTION.

6-2. This section contains information for ordering replacement parts. The abbreviations used in the parts list are described in table 6-1. Table 6-2 lists the parts in alphanumeric order by reference designator and includes the manufacturer and manufacturer's part number. Table 6-3 contains the list of manufacturers' codes.

6-3. ORDERING INFORMATION.

6-4. To obtain replacement parts from Hewlett-Packard, address order or inquiry to the nearest Hewlett-Packard Sales/Service Office and supply the following information:

a. Instrument model and serial number.

b. HP part number of items(s).

c. Quanity of part(s) desired.

d. Reference designator of part(s).

6-5. To order a part not listed in the table, provide the following information:

a. Instrument model and serial number.

b. Description of the part, including function and location in the instrument.

c. Quanity desired.

Table 6-1. Abbreviations for Replaceable Parts List

A	= ampere(s)
ASSY	= assembly
BD	= board(s)
BH	= binder head
BP	= bandpass
C	= centi (10^{-2})
CAR	= carbon
CCW	= counterclockwise
CER	= ceramic
CMO	= cabinet mount only
COAX	= coaxial
COEF	= coefficient
COMP	= composition
CONN	= connector(s)
CRT	= cathode-ray tube
CW	= clockwise
D	= deci (10^{-1})
DEPC	= deposited carbon
DP	= double pole
DT	= double throw
ELECT	= electrolytic
ENCAP	= encapsulated
EXT	= external
F	= farad(s)
FET	= field-effect transistor(s)
FH	= flat head
FIL H	= fillister head
FXD	= fixed
G	= giga (10^{9})
GE	= germanium
GL	= glass
GRD	= ground(ed)
H	= henry(ies)
HG	= mercury
HP	= Hewlett-Packard
HZ	= hertz
IF	= intermediate freq.
IMPG	= impregnated
INCD	= incandescent
INCL	= include(s)
INS	= insulation(ed)
INT	= internal
K	= kilo (10^{3})
KG	= kilogram
LB	= pound(s)
LH	= left hand
LIN	= linear taper
LOG	= logarithmic taper
LPF	= low-pass filter(s)
LVR	= lever
M	= milli (10^{-3})
MEG	= mega (10^{6})
MET FILM	= metal film
MET OX	= metal oxide
MFR	= manufacturer
MINAT	= miniature
MOM	= momentary
MTG	= mounting
MY	= mylar
N	= nano (10^{-9})
N/C	= normally closed
NE	= neon
N/O	= normally open
NPO	= negative positive zero (zero temperature coefficient)
NPN	= negative-positive-negative
NSR	= not separately replaceable
OBD	= order by description
OH	= oval head
OX	= oxide
P	= peak
PC	= printed (etched) circuit(s)
PF	= picofarads
PHL	= Phillips
PIV	= peak inverse voltage(s)
PNP	= positive-negative-positive
P/O	= part of
PORC	= porcelain
POS	= position(s)
POT	= potentiometer(s)
P-P	= peak-to-peak
PRGM	= program
PS	= polystyrene
PWV	= peak working voltage
RECT	= rectifier(s)
RF	= radio frequency
RFI	= radio frequency interference
RH	= round head or right hand
RMO	= rack mount only
RMS	= root mean square
RWV	= reverse working voltage
S-B	= slow-blow
SCR	= silicon controlled rectifier
SE	= selenium
SEC	= second(s)
SECT	= section(s)
SI	= silicon
SIL	= silver
SL	= slide
SP	= single pole
SPL	= special
ST	= single throw
STD	= standard
TA	= tantalum
TD	= time delay
TFL	= teflon
TGL	= toggle
THYR	= thyristor
TI	= titanium
TNLDIO	= tunnel diode(s)
TOL	= tolerance
TRIM	= trimmer
U	= micro (10^{-6})
V	= volts
VAR	= variable
VDCW	= dc working volt(s)
W	= watt(s)
W/	= with
WIV	= working inverse voltage
W/O	= without
WW	= wirewound

Table 6-2. Replaceable Parts

Reference Designation	HP Part Number	Qty	Description	Mfr Code	Mfr Part Number
			CHASSIS PARTS		
A1	01331-66502		LOW VOLTAGE POWER SUPPLY ASSY	28480	01331-66502
A2	01331-66504		LOW VOLTAGE RECTIFIER ASSY	28480	01331-66504
A3	01331-66524		HIGH VOLTAGE POWER SUPPLY ASSY	28480	01331-66524
A4	01201-66510		HIGH VOLTAGE RECTIFIER ASSY	28480	01201-66510
A5	01331-66517		MAIN ASSY	28480	01331-66517
A6	01331-66507		STORE TIME ASSY	28480	01331-66507
A7	01331-61103		HIGH VOLTAGE TRIPLER ASSY	28480	01331-61103
A8	01331-61901		SWITCH PUSHBUTTON ASSY	28480	01331-61901
C1	0160-2157	1	C:FXD ELECT 500 UF +100-10% 50VDCW	56289	68D-D47157-DFP
DS1	2140-0350	1	LAMP:INCANDESCENT 28V 0.024 AMP	71744	CM 6838
E1	1400-0084	1	FUSEHOLDER:EXTRACTOR POST TYPE	75915	342014
E2	00183-67701	1	BASE:PILOT LIGHT	28480	00183-67701
F1	2110-0059	1	FUSE:CARTRIDGE 1-1/2A SLO-BLO	71400	MDL 1.5
F1			(FOR 115 VAC OPERATION)		
F1	2110-0020	1	FUSE:0.8A 250V SLOW-BLOW	75915	313.800S
F1			(FOR 230 VAC OPERATION)		
J1	1250-0118	3	CONNECTOR:BNC	24931	28JR 128-1
J2	1250-0118		CONNECTOR:BNC	24931	28JR 128-1
J3	1250-0118		CONNECTOR:BNC	24931	28JR 128-1
J4	1251-2357	1	SOCKET:3-PIN MALE POWER RECEPTACLE	82389	EAC-301
L1	01331-66001	1	COIL ASSY:TRACE ALIGN	28480	01331-66001
MP1	01331-00209	1	PANEL:FRONT	28480	01331-00209
MP2	01331-00201	1	PANEL:FRONT.RECESSED	28480	01331-00201
MP3	01331-00206	1	PANEL:REAR	28480	01331-00206
MP4	01331-20501	1	FRAME:LEFT	28480	01331-20501
MP5	5060-0704	1	FRAME ASSY:6 X 16 SM	28480	5060-0704
MP6	01331-04108	1	COVER:TOP	28480	01331-04108
MP7	01331-04107	1	COVER:BOTTOM	28480	01331-04107
MP8	01331-04109	1	COVER:SIDE	28480	01331-04109
MP9	1400-0781	1	COMPONENT CLIP. BLACK VINYL	00000	GBD
MP10	5060-0728	2	FOOT ASSY:HALF MODULE	28480	5060-0728
MP11	01331-00101	1	DECK:MAIN	28480	01331-00101
MP12	01331-05501	1	SHIELD:TRANSFORMER	28480	01331-05501
MP13	01331-64101	1	COVER:TRANSFORMER SHIELD	28480	01331-64101
MP14	5040-0453	1	COVER:POTENTIOMETER(FOCUS)	28480	5040-0453
MP15	5040-0702	6	INSULATOR:CONNECTOR	28480	5040-0702
MP16	00180-01208	2	BRACKET:CKT CONT MOUNTING	28480	00180-01208
MP17	00851-0008	1	COVER:SOCKET	28480	00851-0008
MP18	01200-44701	1	SUPPORT:CKT	28480	01200-44701
MP19	01200-44703	1	SUPPORT:CKT SHIELD	28480	01200-44703
MP20	01331-00601	1	SHIELD:HIGH VOLTAGE POWER SUPPLY	28480	01331-00601
MP21	01331-01202	1	BRACKET:RECTIFIER-CAPACITOR	28480	01331-01202
MP22	01331-04104	1	COVER:HIGH VOLTAGE TRIPLER ASSY	28480	01331-04104
MP23	5020-0576	1	BEZEL:CATHODE RAY TUBE	28480	5020-0576
MP24	5020-0577	1	BEZEL:DIVIDER	28480	5020-0577
MP25	01331-22203	1	BEZEL:SIDE	28480	01331-22203
MP26	5020-0578	1	BEZEL:TOP	28480	5020-0578
MP27	5020-0579	1	BEZEL:BOTTOM	28480	5020-0579
MP28	5020-0580	1	BEZEL:LEFT SIDE	28480	5020-0580
MP29	01331-25401	1	INSULATOR:CP	28480	01331-25401
MP30	01331-60601	1	SHIELD:CATHODE RAY TUBE	28480	01331-60601
MP31	5060-0519	1	SCREEN ASSY	28480	5060-0519
MP32	01331-04701	2	SPACER:CABINET	28480	01331-04701
MP33	00181-47101		GASKET:HIGH VOLTAGE CONNECTOR	28480	00181-47101
MP34	00181-47102		GASKET:HIGH VOLTAGE CONNECTOR	28480	00181-47102
MP35	1410-0052	5	BUSHING:POTENTIOMETER	28480	1410-0052
MP36	1450-0404	1	LENS:CLEAR	28480	1450-0404
MP37	00181-04101	2	COVER:HIGH VOLTAGE CONNECTOR	28480	00181-04101
MP38	1200-0408	1	COVER:CKT SOCKET	28480	1200-0408
MP39	00183-67407	5	KNOB ASSY	28480	00183-67407
MP40	0370-0451	3	BEZEL:PUSHBUTTON KNOB BLK NYLON	28480	0370-0451
MP41	00181-04101		COVER:HIGH VOLTAGE CONNECTOR	28480	00181-04101
MP42	00181-47101		GASKET:HIGH VOLTAGE CONNECTOR	28480	00181-47101
MP43	00181-47102		GASKET:HIGH VOLTAGE CONNECTOR	28480	00181-47102
Q1	5080-0475	1	TRANSISTOR ASSY:SI PNP	28480	5080-0475
Q2	5080-0476	2	TRANSISTOR ASSY:SI NPN	28480	5080-0476
Q3	5060-0475	1	TRANSISTOR	28480	5060-0475
Q4	5080-0476		TRANSISTOR ASSY:SI NPN	28480	5080-0476
Q5	5060-0505	1	TRANSISTOR ASSY	28480	5060-0505
R1	2100-0823	1	R:VAR COMP 250K OHM 20% LIN 1/4W	28480	2100-0823
R2	0687-5631	1	R:FXD COMP 56K OHM 10% 1/2W	01121	EB 5631
R3	2100-2757	1	R:VAR CERMET 5K OHM 20% LIN 2W	28480	2100-2757
R4	2100-2563	1	R:VAR COMP 5 MEGOHM 20% LIN 1/2W	28480	2100-2563
R5	2100-2846	1	R:VAR CERMET 1 MEGOHM 20% LIN 2W	28480	2100-2846

See introduction to this section for ordering information

Table 6-2. Replaceable Parts (Cont'd)

Reference Designation	HP Part Number	Qty	Description	Mfr Code	Mfr Part Number
R6	2100-2806	2	R:VAR COMP 2.5K OHM 20% LIN 1/2W	28480	2100-2806
R7	2100-2806		R:VAR COMP 2.5K OHM 20% LIN 1/2W	28480	2100-2806
R8	2100-0013	1	R:VAR 50K OHM 20% LIN 1/3W	28480	2100-0013
R9	0684-1041		R:FXD COMP 100K OHM 10% 1/4W	01121	CB 1041
S1	3101-0890	1	SWITCH:TOGGLE SPDT	28480	3101-0890
S2	3101-0033	1	SWITCH:SLIDE DPDT 0.5A 125AC/DC	82389	11A-1009A
S3	3101-0070	1	SWITCH:SLIDE	79727	G-126
T1	9100-1126	1	TRANSFORMER:POWER	28480	9100-1126
TB1	01200-67501	1	TERMINAL BOARD:TRANSFORMER	28480	01200-67501
V1	5083-2574	1	CRT:SPECIAL	28480	5083-2574
W1	8120-1348	1	CABLE ASSY:POWER, DETACHABLE	70903	KHS-7041
W3	01331-61601	1	CABLE:MAIN	28480	01331-61601
W4	01331-61602	1	CABLE:HIGH VOLTAGE	28480	01331-61602
W5	01331-61608	1	CABLE:POWER	28480	01331-61608
W6	01331-61609	1	CABLE:CAPACITOR	28480	01331-61609
W7			NOT ASSIGNED		
W8			NOT ASSIGNED		
W9			NOT ASSIGNED		
W10	01331-61621	1	CABLE:OUTPUT	28480	01331-61621
W11	01331-61622	1	CABLE:OUTPUT	28480	01331-61622
W12	01331-61619	1	CABLE:COAXIAL	28480	01331-61619
W13	01331-61620	1	CABLE:COAXIAL	28480	01331-61620
W14	01331-61614	1	CABLE:COAX	28480	01331-61614
XV1	1200-0037	1	SOCKET:CRT 14-CONTACT	28480	1200-0037

See introduction to this section for ordering information

Table 6-2. Replaceable Parts (Cont'd)

Reference Designation	HP Part Number	Qty	Description	Mfr Code	Mfr Part Number
A1	01331-66502	1	LOW VOLTAGE POWER SUPPLY ASSY	28480	01331-66502
A1C1	0160-0168	6	C:FXD MY 0.1 UF 10% 200VDCW	56289	192P10492-PTS
A1C2	0180-2134	2	C:FXD ELECT 20 UF +50-10% 100VDCW	56289	34D206F100EJ4-DSB
A1C3	0160-0168		C:FXD MY 0.1 UF 10% 200VDCW	56289	192P10492-PTS
A1C4	0180-0197	1	C:FXD ELECT 2.2 UF 10% 20VDCW	56289	150D225X9020A2-DYS
A1C5	0180-1731	1	C:FXD ELECT 4.7 UF 10% 50VDCW	56289	150D475X9050B2-DYS
A1C6	0180-2134		C:FXD ELECT 20 UF +50-10% 100VDCW	56289	34D206F100EJ4-DSB
A1CR1	1901-0040	42	DIODE:SILICON 50 MA 30 WV	07263	FDG1088
A1CR2	1901-0040		DIODE:SILICON 50 MA 30 WV	07263	FDG1088
A1CR3	1901-0040		DIODE:SILICON 50 MA 30 WV	07263	FDG1088
A1CR4	1901-0026	7	DIODE:SILICON 0.75A 200PIV	04713	SR1358-8
A1CR5	1901-0040		DIODE:SILICON 50 MA 30 WV	07263	FDG1088
A1CR6	1901-0040		DIODE:SILICON 50 MA 30 WV	07263	FDG1088
A1CR7	1901-0040		DIODE:SILICON 50 MA 30 WV	07263	FDG1088
A1CR8	1901-0026		DIODE:SILICON 0.75A 200PIV	04713	SR1358-8
A1F1	2110-0004	1	FUSE:CARTRIDGE 1/4 AMP 250V	75915	3AG/CAT. 312.250
A1F2	2110-0012	2	FUSE:0.5 AMP 250V	75915	312.500
A1F3	2110-0012		FUSE:0.5 AMP 250V	75915	312.500
A1MP1	2110-0269	8	CLIP:FUSE 0.250" DIA	91506	6008-32CN
A1MP2	0380-0161	1	STANDOFF:6-32 X 0.625" LG	00000	OBD
A1Q1	1854-0071	18	TSTR:SI NPN(SELECTED FROM 2N3704)	28480	1854-0071
A1Q2	1853-0036	7	TSTR:SI PNP	80131	2N3906
A1Q3	1854-0022	7	TSTR:SI NPN	07263	S17643
A1Q4	1854-0071		TSTR:SI NPN(SELECTED FROM 2N3704)	28480	1854-0071
A1Q5	1854-0071		TSTR:SI NPN(SELECTED FROM 2N3704)	28480	1854-0071
A1R1	0698-3605	2	R:FXD MET OX 15 OHM 5% 2W	28480	0698-3605
A1R2	0684-1021	7	R:FXD COMP 1000 OHM 10% 1/4W	01121	CB 1021
A1R3	0757-0456	1	R:FXD MET FLM 43.2K OHM 1% 1/8W	28480	0757-0456
A1R4	0764-0043	1	R:FXD MET OX 2.7K OHM 5% 2W	28480	0764-0043
A1R5	0757-0392	1	R:FXD MET FLM 43.2 OHM 1% 1/8W	28480	0757-0392
A1R6	0757-0450	2	R:FXD MET FLM 22.1K OHM 1% 1/8W	28480	0757-0450
A1R7	0757-0401	3	R:FXD MET FLM 100 OHM 1% 1/8W	28480	0757-0401
A1R8	0757-0110	1	R:FXD MET FLM 12.8K OHM 1% 1/4W	28480	0757-0110
A1R9	0698-7142	1	R:FXD FLM 12.3K OHM 1% 1/4W	28480	0698-7142
A1R10	0684-3321	2	R:FXD COMP 3300 OHM 10% 1/4W	01121	CB 3321
A1R11	0698-3605		R:FXD MET OX 15 OHM 5% 2W	28480	0698-3605
A1R12	0684-1021		R:FXD COMP 1000 OHM 10% 1/4W	01121	CB 1021
A1R13	0684-5631	1	R:FXD COMP 56K OHM 10% 1/4W	01121	CB 5631
A1R14	0698-3443	1	R:FXD MET FLM 287 OHM 1% 1/8W	28480	0698-3443
A1R15	0757-0750	1	R:FXD MET FLM 6810 OHM 1% 1/4W	28480	0757-0750
A1R16	0684-3331	1	R:FXD COMP 33K OHM 10% 1/4W	01121	CB 3331
A1R17	0684-4741	3	R:FXD COMP 470K OHM 10% 1/4W	01121	CB 4741
A1R18	0757-0757	2	R:FXD MET FLM 15K OHM 1% 1/4W	28480	0757-0757
A1R19	0684-4741		R:FXD COMP 470K OHM 10% 1/4W	01121	CB 4741
A1R20	0757-0389	1	R:FXD MET FLM 33.2 OHM 1% 1/8W	28480	0757-0389
A1R21	0757-0433	1	R:FXD MET FLM 3.32K OHM 1% 1/8W	28480	0757-0433
A1R22	2100-2982	1	R:VAR COMP 1K OHM 20% LIN 1/4W	28480	2100-2982
A1R23	0698-3264	1	R:FXD FLM 11.8K OHM 1% 1/8W	28480	0698-3264
A1VR1	1902-3357	2	DIODE BREAKDOWN:56.2V 5%	28480	1902-3357
A1VR2	1902-0034	1	DIODE:5.76V 10%	28480	1902-0034
A1VR3	1902-3357		DIODE BREAKDOWN:56.2V 5%	28480	1902-3357
A1VR4	1902-0018	1	DIODE BREAKDOWN:11.7V 5%	04713	1N941
A2	01331-66504	1	LOW VOLTAGE RECTIFIER ASSY	28480	01331-66504
A2C1	0180-2138	1	C:FXD ELECT 150 UF +50-10% 250VDCW	56289	68D-10044-DFP
A2C2	0180-2159	2	C:FXD ELECT 300 UF +75-10% 150VDCW	56289	68D-047670-DFP
A2C3	0180-2159		C:FXD ELECT 300 UF +75-10% 150VDCW	56289	68D-047670-DFP
A2R1	0684-1841	1	R:FXD COMP 180K OHM 10% 1/4W	01121	CB 1841
A2R2	0684-1041	5	R:FXD COMP 100K OHM 10% 1/4W	01121	CB 1041
A2R3	0684-1041		R:FXD COMP 100K OHM 10% 1/4W	01121	CB 1041
A2U1	1906-0006	3	DIODE ASSY:BRIDGE RECTIFIER	28480	1906-0006
A2U2	1906-0006		DIODE ASSY:BRIDGE RECTIFIER	28480	1906-0006
A2U3	1906-0006		DIODE ASSY:BRIDGE RECTIFIER	28480	1906-0006
A3	01331-66524	1	HIGH VOLTAGE POWER SUPPLY ASSY	28480	01331-66524
A3C1	0180-0109	1	C:FXD ELECT 18 UF 100VDCW	56289	40D186F100DH 6M1
A3C2	0180-0116	1	C:FXD ELECT 6.8 UF 10% 35VDCW	56289	150D685X9035B2-DYS
A3C3	0180-0091	1	C:FXD ELECT 10 UF +50-10% 100VDCW	56289	30D106F100DC2-DSM
A3C4	0160-0165	2	C:FXD MY 0.056 UF 10% 200VDCW	56289	192P56392-PTS
A3C5	0170-0024	1	C:FXD MY 0.022UF 20% 200VDCW	56289	192P22302
A3C6	0160-0165		C:FXD MY 0.056 UF 10% 200VDCW	56289	192P56392-PTS
A3C7	0160-2403	1	C:FXD CER 1500 PF 20% 5K VDCW	72982	828-025-X5R0-152M
A3C8	0160-3007	6	C:FXD CER 4700 PF 20% 4K VDCW	72982	3888-024-Y5S0-472M
A3C9	0160-3008	5	C:FXD CER 4700 PF 20% 4K VDCW	72982	3888-024-Y5S0-472M
A3C10	0160-3007		C:FXD CER 4700 PF 20% 4K VDCW	72982	3888-024-Y5S0-472M
A3C11	0160-3008		C:FXD CER 4700 PF 20% 4K VDCW	72982	3888-024-Y5S0-472M
A3C12	0160-3007		C:FXD CER 4700 PF 20% 4K VDCW	72982	3888-024-Y5S0-472M

See introduction to this section for ordering information

Table 6-2. Replaceable Parts (Cont'd)

Reference Designation	HP Part Number	Qty	Description	Mfr Code	Mfr Part Number
A3C13			NOT ASSIGNED		
A3C16			NOT ASSIGNED		
A3C17	0160-2145	2	C:FXD CER 5000 PF +80-20% 100VDCW	91418	TA
A3C18	0150-0021	1	C:FXD TI DIOX 0.47PF 5% 500VDCW	78488	TYPE GA
A3C19	0121-0168	1	C:VAR TEFLON 0.25-1.50 PF 600VDCW	28480	0121-0168
A3C20	0160-2145		C:FXD CER 5000 PF +80-20% 100VDCW	91418	TA
A3C21	0150-0096	1	C:FXD CER 0.05 UF +80-20% 100VDCW	91418	TA
A3C22	0160-3448	2	C:FXD CER 1000 PF 10% 1000VDCW	56289	C067B251F102KS25-CDH
A3C23	0160-3453	1	C:FXD CER 0.05 UF +80-20% 100VDCW	56289	C023A101L5032S25-CDH
A3C24	0160-3448		C:FXD CER 1000 PF 10% 1000VDCW	56289	C067B251F102KS25-CDH
A3CR1	1901-0049	1	DIODE:SILICON 50PIV	28480	1901-0049
A3CR2	1901-0040		DIODE:SILICON 50 MA 30 WV	07263	FDG1088
A3CR3			NOT ASSIGNED		
A3CR4	1901-0040		DIODE:SILICON 50 MA 30 WV	07263	FDG1088
A3CR5	1901-0040		DIODE:SILICON 50 MA 30 WV	07263	FDG1088
A3CR6	1901-0040		DIODE:SILICON 50 MA 30 WV	07263	FDG1088
A3CR7			NOT ASSIGNED		
A3CR9			NOT ASSIGNED		
A3CR10	1901-0040		DIODE:SILICON 50 MA 30 WV	07263	FDG1088
A3CR11	1901-0040		DIODE:SILICON 50 MA 30 WV	07263	FDG1088
A3CR12	1901-0028	1	DIODE:SILICON 0.75A 400PIV	04713	SR1358-9
A3L1	9140-0129	2	COIL:FXD RF 220 UH	28480	9140-0129
A3L2	9140-0129		COIL:FXD RF 220 UH	28480	9140-0129
A3Q1			NOT ASSIGNED		
A3Q2	1853-0036		TSTR:SI PNP	80131	2N3906
A3Q3	1855-0057	1	TSTR:SI FET N-CHANNEL	28480	1855-0057
A3Q4			NOT ASSIGNED		
A3Q6			NOT ASSIGNED		
A3Q7	1853-0036		TSTR:SI PNP	80131	2N3906
A3Q8	1854-0215	6	TSTR:SI NPN	80131	2N3904
A3Q9	1853-0038	1	TSTR:SI PNP	28480	1853-0038
A3Q10	1854-0271	1	TSTR:SI NPN	28480	1854-0271
A3R1	0684-4701	2	R:FXD COMP 47 OHM 10% 1/4W	01121	CB 4701
A3R2	0687-1001	1	R:FXD COMP 10 OHM 10% 1/2W	01121	EB 1001
A3R3	0684-1511	1	R:FXD COMP 150 OHM 10% 1/4W	01121	CB 1511
A3R4	0684-2211	7	R:FXD COMP 220 OHM 10% 1/4W	01121	CB 2211
A3R5	0757-0438	1	R:FXD MET FLM 5.11K OHM 1% 1/8W	28480	0757-0438
A3R6	0757-0465	2	R:FXD MET FLM 100K OHM 1% 1/8W	28480	0757-0465
A3R7	0757-0135	1	R:FXD MET FLM 511K OHM 1% 1/2W	28480	0757-0135
A3R8	2100-0836	1	R:VAR COMP 100K OHM 20% LIN 1/4W	28480	2100-0836
A3R9	0684-1241	1	R:FXD COMP 120K OHM 10% 1/4W	01121	CB 1241
A3R10	0698-7182	1	R:FXD MET FLM 30 MEGOHM 1% 2W	28480	0698-7182
A3R11	2100-0981	1	R:VAR COMP 1 MEGOHM 20% LIN 1/4W	28480	2100-0981
A3R12	0836-0003	1	R:FXD FLM 29 MEGOHM 10% 1W	28480	0836-0003
A3R13	0684-1051	1	R:FXD COMP 1MEGOHM 1% 1/4W	01121	CB 1051
A3R14			NOT ASSIGNED		
A3R15	0687-2751	1	R:FXD COMP 2.7 MEGOHM 10% 1/2W	01121	EB 2751
A3R16	0693-6851	4	R:FXD COMP 6.8 MEGOHM 10% 2W	01121	HB 6851
A3R17	0693-6851		R:FXD COMP 6.8 MEGOHM 10% 2W	01121	HB 6851
A3R18	0693-6851		R:FXD COMP 6.8 MEGOHM 10% 2W	01121	HB 6851
A3R19	0693-6851		R:FXD COMP 6.8 MEGOHM 10% 2W	01121	HB 6851
A3R20	0757-0283	1	R:FXD MET FLM 2.00K OHM 1% 1/8W	28480	0757-0283
A3R21	0698-3449	1	R:FXD MET FLM 28.7K OHM 1% 1/8W	28480	0698-3449
A3R22	0757-0124	1	R:FXD MET FLM 39.2K OHM 1% 1/8W	28480	0757-0124
A3R23	0687-1211	1	R:FXD COMP 120 OHM 10% 1/2W	01121	EB 1211
A3R24	0757-0458	2	R:FXD MET FLM 51.1K OHM 1% 1/8W	28480	0757-0458
A3R25			NOT ASSIGNED		
A3R30			NOT ASSIGNED		
A3R31	0698-3417	1	R:FXD MET FLM 23.7K OHM 1% 1/2W	28480	0698-3417
A3R32	0698-4935	1	R:FXD MET FLM 41.2K OHM 1% 1/2W	28480	0698-4935
A3R33	0698-3136	1	R:FXD MET FLM 17.8K OHM 1% 1/8W	28480	0698-3136
A3R34	0757-0449	1	R:FXD FLM 20K OHM 1% 1/8W	28480	0757-0449
A3R35	0757-0199	2	R:FXD MET FLM 21.5K OHM 1% 1/8W	28480	0757-0199
A3R36	0757-0199		R:FXD MET FLM 21.5K OHM 1% 1/8W	28480	0757-0199
A3R37	0757-0280	2	R:FXD MET FLM 1K OHM 1% 1/8W	28480	0757-0280
A3R38	0757-0757		R:FXD MET FLM 15K OHM 1% 1/4W	28480	0757-0757
A3R39	0757-0837	1	R:FXD MET FLM 8.25K OHM 1% 1/2W	28480	0757-0837
A3R40	0757-0408	1	R:FXD MET FLM 243 OHM 1% 1/8W	28480	0757-0408
A3R41	0684-1011	3	R:FXD COMP 100 OHM 10% 1/4W	01121	CB 1011
A3VR1	2140-0013	2	LAMP:GLOW 0.3 MILLIAMPS T-2 BULB	08806	SAB-A(NE-23A)
A3VR2	2140-0013		LAMP:GLOW 0.3 MILLIAMPS T-2 BULB	08806	SAB-A(NE-23A)
A4	01201-66510	1	HIGH VOLTAGE RECTIFIER ASSY	28480	01201-66510
A4C1	0160-3008		C:FXD CER 4700 PF 20% 4K VDCW	72982	3888-024-Y5S0-472M
A4C2	0160-3007		C:FXD CER 4700 PF 20% 4K VDCW	72982	3888-024-Y5S0-472M
A4C3	0160-3008		C:FXD CER 4700 PF 20% 4K VDCW	72982	3888-024-Y5S0-472M

See introduction to this section for ordering information

Table 6-2. Replaceable Parts (Cont'd)

Reference Designation	HP Part Number	Qty	Description	Mfr Code	Mfr Part Number
A4C4	0160-3007		C:FXD CER 4700 PF 20% 4K VDCW	72982	3888-024-Y5SO-472M
A4C5	0160-3008		C:FXD CER 4700 PF 20% 4K VDCW	72982	3888-024-Y5SO-472M
A4C6	0160-3007		C:FXD CER 4700 PF 20% 4K VDCW	72982	3888-024-Y5SO-472M
A4CR1	1901-0341	2	DIODE:SI 7000 PIV 50MA	28480	1901-0341
A4CR2	1901-0341		DIODE:SI 7000 PIV 50MA	28480	1901-0341
A4MP1	5040-0402	1	MOUNT:TRANSFORMER	28480	5040-0402
A4MP2	5040-0430	1	MOUNT:TRANSFORMER	28480	5040-0430
A4R1	0684-2231	3	R:FXD COMP 22K OHM 10% 1/4W	01121	CB 2231
A4R2	0684-1531	2	R:FXD COMP 15K OHM 10% 1/4W	01121	CB 1531
A4T1	01201-61102	1	TRANSFORMER ASSY:HIGH VOLTAGE	28480	01201-61102
A5	01331-66517	1	MAIN ASSY	28480	01331-66517
A5C1	0160-0168		C:FXD MY 0.1 UF 10% 200VDCW	56289	192P10492-PTS
A5C2	0180-0089	1	C:FXD AL ELECT 10 UF +50-10% 150VDCW	56289	30D106F150DD2-DSM
A5C3	0160-0168		C:FXD MY 0.1 UF 10% 200VDCW	56289	192P10492-PTS
A5C4	0180-0058	1	C:FXD AL ELECT 50 UF +75-10% 25VDCW	56289	30D506G025CC2-DSM
A5C5	0180-0230	1	C:FXD ELECT 1.0 UF 20% 50VDCW	56289	150D105X0050A2-DYS
A5C6	0150-0093	1	C:FXD CER 0.01 UF +80-20% 100VDCW	72982	801-K800011
A5C7	0160-2913	4	C:FXD CER 0.01 UF +85-20% 500VDCW	72982	811-014-Y500-103Z
A5C8	0160-2913		C:FXD CER 0.01 UF +85-20% 500VDCW	72982	811-014-Y500-103Z
A5C9	0140-0208	4	C:FXD MICA 680 PF 5%	72136	RDM15F681J3C
A5C10	0150-0084	5	C:FXD CER 0.1 UF +80-20% 100VDCW	72982	8131-100-651-104Z
A5C11	0150-0084		C:FXD CER 0.1 UF +80-20% 100VDCW	72982	8131-100-651-104Z
A5C12	0140-0208		C:FXD MICA 680 PF 5%	72136	RDM15F681J3C
A5C13	0121-0407	1	C:VAR TRIMMER 0.7-3.0 PF	72982	536-016
A5C14	0160-2913		C:FXD CER 0.01 UF +85-20% 500VDCW	72982	811-014-Y500-103Z
A5C15	0160-2913		C:FXD CER 0.01 UF +85-20% 500VDCW	72982	811-014-Y500-103Z
A5C16	0140-0208		C:FXD MICA 680 PF 5%	72136	RDM15F681J3C
A5C17	0150-0084		C:FXD CER 0.1 UF +80-20% 100VDCW	72982	8131-100-651-104Z
A5C18	0150-0084		C:FXD CER 0.1 UF +80-20% 100VDCW	72982	8131-100-651-104Z
A5C19	0140-0208		C:FXD MICA 680 PF 5%	72136	RDM15F681J3C
A5C20			NOT ASSIGNED		
A5C23			NOT ASSIGNED		
A5C24	0140-0159	1	C:FXD MICA 3000 PF 2%	28480	0140-0159
A5C25	0150-0084		C:FXD CER 0.1 UF +80-20% 100VDCW	72982	8131-100-651-104Z
A5C26	0160-2210	2	C:FXD MICA 470 PF 5%	28480	0160-2210
A5C27	0160-0297	1	C:FXD MY 0.0012 UF 10% 200VDCW	56289	192P12292-PTS
A5C28	0160-2150	3	C:FXD MICA 33 PF 5%	28480	0160-2150
A5C29	0140-0206	1	C:FXD MICA 270 PF 5%	72136	RDM15F2715 500V
A5C30	0160-0298	1	C:FXD MY 0.0015 UF 10% 200VDCW	56289	192P15292-PTS
A5C31	0160-2150		C:FXD MICA 33 PF 5%	28480	0160-2150
A5C32	0140-0196	1	C:FXD MICA 150 PF 5%	72136	RDM15F151J3C
A5C33	0160-2146	3	C:FXD CER 0.02 UF +80-20% 100VDCW	91418	TA
A5C34	0160-2146		C:FXD CER 0.02 UF +80-20% 100VDCW	91418	TA
A5C35	0180-1746	1	C:FXD ELECT 15 UF 10% 20VDCW	28480	0180-1746
A5C36	0160-0168		C:FXD MY 0.1 UF 10% 200VDCW	56289	192P10492-PTS
A5C37	0160-0168		C:FXD MY 0.1 UF 10% 200VDCW	56289	192P10492-PTS
A5C38	0140-0154	1	C:FXD MICA 1300 PF 5%	28480	0140-0154
A5C39	0160-2146		C:FXD CER 0.02 UF +80-20% 100VDCW	91418	TA
A5C40	0160-2210		C:FXD MICA 470 PF 5%	28480	0160-2210
A5C41	0160-2228	1	C:FXD MICA 2700 PF 5%	28480	0160-2228
A5C42	0160-0207	1	C:FXD MYLAR 0.01UF 5% 200VDCW	28480	0160-0207
A5C43	0180-1735	1	C:FXD ELECT 0.22 UF 10% 35VDCW	28480	0180-1735
A5C44	0140-0192	1	C:FXD MICA 68 PF 5%	28480	0140-0192
A5C45	0160-2150		C:FXD MICA 33 PF 5%	28480	0160-2150
A5C46	0150-0075	1	C:FXD CER 4700 PF +100-20% 500VDCW	72982	851-000-X500-472Z
A5CR1	1901-0026		DIODE:SILICON 0.75A 200PIV	04713	SR1358-8
A5CR2	1901-0026		DIODE:SILICON 0.75A 200PIV	04713	SR1358-8
A5CR3	1901-0025	10	DIODE:SILICON 100MA/1V	07263	FD 2387
A5CR4	1901-0045	4	DIODE:SILICON 0.75A 100PIV	04713	SR1358-7
A5CR5	1901-0045		DIODE:SILICON 0.75A 100PIV	04713	SR1358-7
A5CR6	1901-0045		DIODE:SILICON 0.75A 100PIV	04713	SR1358-7
A5CR7	1901-0045		DIODE:SILICON 0.75A 100PIV	04713	SR1358-7
A5CR8	1901-0025		DIODE:SILICON 100MA/1V	07263	FD 2387
A5CR9	1901-0025		DIODE:SILICON 100MA/1V	07263	FD 2387
A5CR10	1901-0025		DIODE:SILICON 100MA/1V	07263	FD 2387
A5CR11	1901-0376	4	DIODE:SILICON 35V	28480	1901-0376
A5CR12	1901-0376		DIODE:SILICON 35V	28480	1901-0376
A5CR13	1901-0040		DIODE:SILICON 50 MA 30 WV	07263	FDG1088
A5CR14	1901-0040		DIODE:SILICON 50 MA 30 WV	07263	FDG1088
A5CR15	1901-0040		DIODE:SILICON 50 MA 30 WV	07263	FDG1088
A5CR16	1901-0040		DIODE:SILICON 50 MA 30 WV	07263	FDG1088
A5CR17	1901-0040		DIODE:SILICON 50 MA 30 WV	07263	FDG1088

See introduction to this section for ordering information

Table 6-2. Replaceable Parts (Cont'd)

Reference Designation	HP Part Number	Qty	Description	Mfr Code	Mfr Part Number
A5CR18	1901-0040		DIODE:SILICON 50 MA 30 WV	07263	FDG1088
A5CR19	1901-0040		DIODE:SILICON 50. MA 30 WV	07263	FDG1088
A5CR20	1901-0040		DIODE:SILICON 50 MA 30 WV	07263	FDG1088
A5CR21	1901-0376		DIODE:SILICON 35V	28480	1901-0376
A5CR22	1901-0376		DIODE:SILICON 35V	28480	1901-0376
A5CR23	1901-0040		DIODE:SILICON 50 MA 30 WV	07263	FDG1088
A5CR24	1901-0040		DIODE:SILICON 50 MA 30 WV	07263	FDG1088
A5CR25	1901-0040		DIODE:SILICON 50 MA 30 WV	07263	FDG1088
A5CR26	1901-0040		DIODE:SILICON 50 MA 30 WV	07263	FDG1088
A5CR27	1901-0040		DIODE:SILICON 50 MA 30 WV	07263	FDG1088
A5CR28	1901-0040		DIODE:SILICON 50 MA 30 WV	07263	FDG1088
A5CR29	1901-0040		DIODE:SILICON 50 MA 30 WV	07263	FDG1088
A5CR30	1901-0040		*DIODE:SILICON 50 MA 30 WV	07263	FDG1088
A5CR31	1901-0040		DIODE:SILICON 50 MA 30 WV	07263	FDG1088
A5CR32	1901-0040		DIODE:SILICON 50 MA 30 WV	07263	FDG1088
A5CR33	1901-0040		DIODE:SILICON 50 MA 30 WV	07263	FDG1088
A5CR34	1901-0040		DIODE:SILICON 50 MA 30 WV	07263	FDG1088
A5CR35	1901-0040		DIODE:SILICON 50 MA 30 WV	07263	FDG1088
A5CR36	1901-0040		DIODE:SILICON 50 MA 30 WV	07263	FDG1088
A5CR37	1901-0026		DIODE:SILICON 0.75A 200PIV	04713	SR1358-8
A5CR38	1901-0025		DIODE:SILICON 100MA/1V	07263	FD 2387
A5CR39	1901-0025		DIODE:SILICON 100MA/1V	07263	FD 2387
A5CR40	1901-0025		DIODE:SILICON 100MA/1V	07263	FD 2387
A5CR41	1901-0044	2	DIODE:SILICON 20MA/1V	28480	1901-0044
A5CR42	1901-0025		DIODE:SILICON 100MA/1V	07263	FD 2387
A5CR43	1901-0026		DIODE:SILICON 0.75A 200PIV	04713	SR1358-8
A5CR44	1901-0418	1	DIODE:SI 3A 400PRRV	04713	SR1846-12
A5CR45	1901-0040		DIODE:SILICON 50 MA 30 WV	07263	FDG1088
A5CR46	1901-0040		DIODE:SILICON 50 MA 30 WV	07263	FDG1088
A5CR47	1901-0040		DIODE:SILICON 50 MA 30 WV	07263	FDG1088
A5CR48	1901-0040		DIODE:SILICON 50 MA 30 WV	07263	FDG1088
A5CR49	1901-0025		DIODE:SILICON 100MA/1V	07263	FD 2387
A5CR50	1901-0026		DIODE:SILICON 0.75A 200PIV	04713	SR1358-8
A5CR51	1901-0025		DIODE:SILICON 100MA/1V	07263	FD 2387
A5CR52			NOT ASSIGNED		
A5CR53	1901-0040		DIODE:SILICON 50 MA 30 WV	07263	FDG1088
A5CR54	1901-0040		DIODE:SILICON 50 MA 30 WV	07263	FDG1088
A5CR55	1901-0040		DIODE:SILICON 50 MA 30 WV	07263	FDG1088
A5CR56	1901-0040		DIODE:SILICON 50 MA 30 WV	07263	FDG1088
A5CR57	1901-0044		DIODE:SILICON 20MA/1V	28480	1901-0044
A5F1	2110-0001	1	FUSE:1 AMP 250V	75915	312001.
A5J1	1251-0213	2	CONNECTOR:PC EDGE 15 CONTACT	95354	91-6915-1700-00
A5J2	1251-0213		CONNECTOR:PC EDGE 15 CONTACT	95354	91-6915-1700-00
A5J3	1251-1283	1	CONNECTOR:PC 6 TUNING TYPE CONTACTS	02660	143-006-07-1158
A5J4	1251-2091	1	CONNECTOR:PC(1 X 15) 15 CONTACT	95354	178-118-181
A5K1	0490-0929	1	RELAY:REED 0.5 A 500 OHM COIL	15636	RA30271121
A5L1	9100-1641	4	COIL:MOLDED CHOKE 240.0 UH	28480	9100-1641
A5L2	9100-1641		COIL:MOLDED CHOKE 240.0 UH	28480	9100-1641
A5L3	9100-1641		COIL:MOLDED CHOKE 240.0 UH	28480	9100-1641
A5L4	9100-1641		COIL:MOLDED CHOKE 240.0 UH	28480	9100-1641
A5L5	9100-2285	1	COIL/CHOKE 560 UH 10%	13019	09-A561K
A5MP1	1205-0095	6	HEAT SINK:TRANSISTOR	13103	22258
A5MP2	2110-0269		CLIP:FUSE 0.250" DIA	91506	6008-32CN
A5MP3	01331-00602	1	SHIELD	28480	01331-00602
A5Q1	1854-0022		TSTR:SI NPN	07263	S17843
A5Q2	1854-0358	2	TSTR:SI NPN	28480	1854-0358
A5Q3	1854-0022		TSTR:SI NPN	07263	S17843
A5Q4	1854-0071		TSTR:SI NPN(SELECTED FROM 2N3704)	28480	1854-0071
A5Q5	1854-0221	2	TSTR:SI NPN(REPL.BY 2N4044)	28480	1854-0221
A5Q6			NOT ASSIGNED		
A5Q7	1854-0071		TSTR:SI NPN(SELECTED FROM 2N3704)	28480	1854-0071
A5Q8	1854-0071		TSTR:SI NPN(SELECTED FROM 2N3704)	28480	1854-0071
A5Q9	1853-0036		TSTR:SI PNP	80131	2N3906
A5Q10	1853-0036		TSTR:SI PNP	80131	2N3906
A5Q11			NOT ASSIGNED		
A5Q12			NOT ASSIGNED		
A5Q13	1854-0022		TSTR:SI NPN	07263	S17843
A5Q14	1854-0234	5	TSTR:SI NPN	80131	2N3440
A5Q15	1854-0234		TSTR:SI NPN	80131	2N3440
A5Q16	1854-0221		TSTR:SI NPN(REPL.BY 2N4044)	28480	1854-0221
A5Q17			NOT ASSIGNED		
A5Q18	1854-0071		TSTR:SI NPN(SELECTED FROM 2N3704)	28480	1854-0071
A5Q19	1854-0071		TSTR:SI NPN(SELECTED FROM 2N3704)	28480	1854-0071
A5Q20	1853-0036		TSTR:SI PNP	80131	2N3906
A5Q21	1853-0036		TSTR:SI PNP	80131	2N3906

See introduction to this section for ordering information

Table 6-2. Replaceable Parts (Cont'd)

Reference Designation	HP Part Number	Qty	Description	Mfr Code	Mfr Part Number
A5Q22			NOT ASSIGNED		
A5Q23			NOT ASSIGNED		
A5Q24	1854-0022		TSTR:SI NPN	07263	S17843
A5Q25	1854-0234		TSTR:SI NPN	80131	2N3440
A5Q26	1854-0234		TSTR:SI NPN	80131	2N3440
A5Q27			NOT ASSIGNED		
A5Q30			NOT ASSIGNED		
A5Q31	1853-0020	1	TSTR:SI PNP(SELECTED FROM 2N3702)	28480	1853-0020
A5Q32	1855-0317	1	TSTR:UNIJUNCTION SI	04713	MU4894
A5Q33	1854-0071		TSTR:SI NPN(SELECTED FROM 2N3704)	28480	1854-0071
A5Q34	1854-0215		TSTR:SI NPN	80131	2N3904
A5Q35	1854-0071		TSTR:SI NPN(SELECTED FROM 2N3704)	28480	1854-0071
A5Q36	1854-0215		TSTR:SI NPN	80131	2N3904
A5Q37	1854-0071		TSTR:SI NPN(SELECTED FROM 2N3704)	28480	1854-0071
A5Q38	1854-0071		TSTR:SI NPN(SELECTED FROM 2N3704)	28480	1854-0071
A5Q39	1854-0022		TSTR:SI NPN	07263	S17843
A5Q40	1854-0071		TSTR:SI NPN(SELECTED FROM 2N3704)	28480	1854-0071
A5Q41	1854-0254	1	TSTR:SI NPN	28480	1854-0254
A5Q42	1854-0358		TSTR:SI NPN	28480	1854-0358
A5Q43	1853-0086	2	TSTR:SI PNP	80131	2N5087
A5Q44	1853-0086		TSTR:SI PNP	80131	2N5087
A5Q45	1854-0071		TSTR:SI NPN(SELECTED FROM 2N3704)	28480	1854-0071
A5Q46	5080-9622	1	Q:SI NPN	28480	5080-9622
A5Q47	1854-0022		TSTR:SI NPN	07263	S17843
A5Q48	1854-0071		TSTR:SI NPN(SELECTED FROM 2N3704)	28480	1854-0071
A5Q49	1854-0071		TSTR:SI NPN(SELECTED FROM 2N3704)	28480	1854-0071
A5Q50	1854-0384	1	TSTR:SI NPN 2N5184	80131	2N5184
A5Q51	1854-0234		TSTR:SI NPN	80131	2N3440
A5Q52	1854-0071		TSTR:SI NPN(SELECTED FROM 2N3704)	28480	1854-0071
A5Q53	1854-0215		TSTR:SI NPN	80131	2N3904
A5Q54	1854-0215		TSTR:SI NPN	80131	2N3904
A5Q55	1854-0475	2	TSTR:SI NPN	28480	1854-0475
A5Q56	1854-0475		TSTR:SI NPN	28480	1854-0475
A5Q57	1854-0071		TSTR:SI NPN(SELECTED FROM 2N3704)	28480	1854-0071
A5Q58	1853-0062	1	TSTR:SI PNP	80131	2N3645
A5Q59	1854-0215		TSTR:SI NPN	80131	2N3904
A5R1	0767-0014	1	R:FXD MET FLM 1500 OHM 5% 3W	28480	0767-0014
A5R2	0764-0033	1	R:FXD MET OX 33 OHM 5% 2W	28480	0764-0033
A5R3	0684-1021		R:FXD COMP 1000 OHM 10% 1/4W	01121	CB 1021
A5R4	0684-2241	1	R:FXD COMP 220K OHM 10% 1/4W	01121	CB 2241
A5R5	0684-3321		R:FXD COMP 3300 OHM 10% 1/4W	01121	CB 3321
A5R6	0757-0388	1	R:FXD FLM 30.1 OHM 1% 1/8W	28480	0757-0388
A5R7	0757-0458		R:FXD MET FLM 51.1K OHM 1% 1/8W	28480	0757-0458
A5R8	0684-1041		R:FXD COMP 100K OHM 10% 1/4W	01121	CB 1041
A5R9	0698-3423	1	R:FXD MET FLM 46.4K OHM 1% 1/2W	28480	0698-3423
A5R10	0757-0851	1	R:FXD MET FLM 43.2K OHM 1.0% 1/2W	28480	0757-0851
A5R11	0684-1031	10	R:FXD COMP 10K OHM 10% 1/4W	01121	CB 1031
A5R12	0811-1671	1	R:FXD WW 2.7 OHM 5% 2W	28480	0811-1671
A5R13	0684-2231		R:FXD COMP 22K OHM 10% 1/4W	01121	CB 2231
A5R14	0684-6821	1	R:FXD COMP 6.8K OHM 10% 1/4W	01121	CB 6821
A5R15	0757-0346	1	R:FXD MET FLM 10 OHM 1% 1/8W	28480	0757-0346
A5R16	0757-0976	2	R:FXD FLM 150K OHM 2% 1/8W	28480	0757-0976
A5R17	0757-0200	1	R:FXD MET FLM 5.62K OHM 1% 1/8W	28480	0757-0200
A5R18	2100-2963	1	R:VAR 4 SECT 50K/3K/25K/100K 30% 1/4W	28480	2100-2963
A5R19	0757-0450		R:FXD MET FLM 22.1K OHM 1% 1/8W	28480	0757-0450
A5R20	0684-1011		R:FXD COMP 100 OHM 10% 1/4W	01121	CB 1011
A5R21	0684-4701		R:FXD COMP 47 OHM 10% 1/4W	01121	CB 4701
A5R22	0757-0367	3	R:FXD MET FLM 100K OHM 1% 1/2W	28480	0757-0367
A5R23	0684-0271	8	R:FXD COMP 2.7 OHM 10% 1/4W	01121	CB 27G1
A5R24	0684-0271		R:FXD COMP 2.7 OHM 10% 1/4W	01121	CB 27G1
A5R25	0687-4701	2	R:FXD COMP 47 OHM 10% 1/2W	01121	EB4701
A5R26	0687-1041	4	R:FXD COMP 100K OHM 10% 1/2W	01121	EB 1041
A5R27	0687-1041		R:FXD COMP 100K OHM 10% 1/2W	01121	EB 1041
A5R28	0687-3321	4	R:FXD COMP 3300 OHM 10% 1/2W	01121	EB 3321
A5R29	0687-3321		R:FXD COMP 3300 OHM 10% 1/2W	01121	EB 3321
A5R30	0757-0416	4	R:FXD MET FLM 511 OHM 1% 1/8W	28480	0757-0416
A5R31	0698-3346	2	R:FXD MET FLM 4.22K OHM 1% 1/2W	28480	0698-3346
A5R32	0757-0416		R:FXD MET FLM 511 OHM 1% 1/8W	28480	0757-0416
A5R33	0757-0833	2	R:FXD MET FLM 5.11K OHM 1% 1/2W	28480	0757-0833
A5R34	0684-2211		R:FXD COMP 220 OHM 10% 1/4W	01121	CB 2211
A5R35	0684-2211		R:FXD COMP 220 OHM 10% 1/4W	01121	CB 2211
A5R36	0684-4731	6	R:FXD COMP 47K OHM 10% 1/4W	01121	CB 4731
A5R37	0684-4731		R:FXD COMP 47K OHM 10% 1/4W	01121	CB 4731
A5R38	2100-2965	2	R:VAR COMP 2000 OHM 20% 0.2W	28480	2100-2965
A5R39	0757-0422	2	R:FXD MET FLM 909 OHM 1% 1/8W	28480	0757-0422

See introduction to this section for ordering information

Table 6-2. Replaceable Parts (Cont'd)

Reference Designation	HP Part Number	Qty	Description	Mfr Code	Mfr Part Number
A5R40	0698-3159	4	R:FXD MET FLM 26.1K OHM 1% 1/8W	28480	0698-3159
A5R41	0698-3159		R:FXD MET FLM 26.1K OHM 1% 1/8W	28480	0698-3159
A5R42			NOT ASSIGNED		
A5R43	0698-0085	4	R:FXD MET FLM 2.61K OHM 1% 1/8W	28480	0698-0085
A5R44			NOT ASSIGNED		
A5R45	0698-0085		R:FXD MET FLM 2.61K OHM 1% 1/8W	28480	0698-0085
A5R46	0757-0413	2	R:FXD MET FLM 392 OHM 1% 1/8W	28480	0757-0413
A5R47	0757-0394	4	R:FXD MET FLM 51.1 OHM 1% 1/8W	28480	0757-0394
A5R48	0757-0394		R:FXD MET FLM 51.1 OHM 1% 1/8W	28480	0757-0394
A5R49	0757-0746	1	R:FXD MET FLM 4.75K OHM 1% 1/4W	28480	0757-0746
A5R50	0757-0820	2	R:FXD MET FLM 1.10K OHM 1% 1/2W	28480	0757-0820
A5R51	0757-0745	2	R:FXD MET FLM 4.32K OHM 1% 1/4W	28480	0757-0745
A5R52	0684-1021		R:FXD COMP 1000 OHM 10% 1/4W	01121	CB 1021
A5R53	0698-3647	8	R:FXD MET OX 15K OHM 5% 2W	28480	0698-3647
A5R54	0698-3647		R:FXD MET OX 15K OHM 5% 2W	28480	0698-3647
A5R55	0698-3647		R:FXD MET OX 15K OHM 5% 2W	28480	0698-3647
A5R56	0698-3647		R:FXD MET OX 15K OHM 5% 2W	28480	0698-3647
A5R57	0757-0367		R:FXD MET FLM 100K OHM 1% 1/2W	28480	0757-0367
A5R58	0687-4701		R:FXD COMP 47 OHM 10% 1/2W	01121	EB4701
A5R59	0687-1041		R:FXD COMP 100K OHM 10% 1/2W	01121	EB 1041
A5R60	0687-1041		R:FXD COMP 100K OHM 10% 1/2W	01121	EB 1041
A5R61	0687-3321		R:FXD COMP 3300 OHM 10% 1/2W	01121	EB 3321
A5R62	0687-3321		R:FXD COMP 3300 OHM 10% 1/2W	01121	EB 3321
A5R63	0757-0416		R:FXD MET FLM 511 OHM 1% 1/8W	28480	0757-0416
A5R64	0698-3346		R:FXD MET FLM 4.22K OHM 1% 1/2W	28480	0698-3346
A5R65	0757-0416		R:FXD MET FLM 511 OHM 1% 1/8W	28480	0757-0416
A5R66	0757-0833		R:FXD MET FLM 5.11K OHM 1% 1/2W	28480	0757-0833
A5R67	0684-2211		R:FXD COMP 220 OHM 10% 1/4W	01121	CB 2211
A5R68	0684-2211		R:FXD COMP 220 OHM 10% 1/4W	01121	CB 2211
A5R69	0684-4731		R:FXD COMP 47K OHM 10% 1/4W	01121	CB 4731
A5R70	0684-4731		R:FXD COMP 47K OHM 10% 1/4W	01121	CB 4731
A5R71	2100-2965		R:VAR COMP 2000 OHM 20% 0.2W	28480	2100-2965
A5R72	0757-0422		R:FXD MET FLM 909 OHM 1% 1/8W	28480	0757-0422
A5R73	0698-3159		R:FXD MET FLM 26.1K OHM 1% 1/8W	28480	0698-3159
A5R74	0698-3159		R:FXD MET FLM 26.1K OHM 1% 1/8W	28480	0698-3159
A5R75			NOT ASSIGNED		
A5R76	0698-0085		R:FXD MET FLM 2.61K OHM 1% 1/8W	28480	0698-0085
A5R77			NOT ASSIGNED		
A5R78	0698-0085		R:FXD MET FLM 2.61K OHM 1% 1/8W	28480	0698-0085
A5R79	0757-0413		R:FXD MET FLM 392 OHM 1% 1/8W	28480	0757-0413
A5R80	0757-0394		R:FXD MET FLM 51.1 OHM 1% 1/8W	28480	0757-0394
A5R81	0757-0394		R:FXD MET FLM 51.1 OHM 1% 1/8W	28480	0757-0394
A5R82	0757-0745		R:FXD MET FLM 4.32K OHM 1% 1/4W	28480	0757-0745
A5R83	0757-0832	2	R:FXD MET FLM 4.75K OHM 1% 1/2W	28480	0757-0832
A5R84	0757-0820		R:FXD MET FLM 1.10K OHM 1% 1/2W	28480	0757-0820
A5R85	0698-3647		R:FXD MET OX 15K OHM 5% 2W	28480	0698-3647
A5R86	0698-3647		R:FXD MET OX 15K OHM 5% 2W	28480	0698-3647
A5R87	0698-3647		R:FXD MET OX 15K OHM 5% 2W	28480	0698-3647
A5R88	0698-3647		R:FXD MET OX 15K OHM 5% 2W	28480	0698-3647
A5R89			NOT ASSIGNED		
A5R98			NOT ASSIGNED		
A5R99	0757-0123	1	R:FXD MET FLM 34.8K OHM 1% 1/8W	28480	0757-0123
A5R100	0757-0280		R:FXD MET FLM 1K OHM 1% 1/8W	28480	0757-0280
A5R101	0757-0446	1	R:FXD MET FLM 15.0K OHM 1% 1/8W	28480	0757-0446
A5R102	0757-0462	2	R:FXD MET FLM 75.0K OHM 1% 1/8W	28480	0757-0462
A5R103	0757-0926	1	R:FXD FLM 1.2K OHM 2% 1/8W	28480	0757-0926
A5R104	0684-1011		R:FXD COMP 100 OHM 10% 1/4W	01121	CB 1011
A5R105	0684-1831	1	R:FXD COMP 18K OHM 10% 1/4W	01121	CB 1831
A5R106	0757-0948	5	R:FXD FLM 10K OHM 2% 1/8W	28480	0757-0948
A5R107	0698-3158	1	R:FXD MET FLM 23.7K OHM 1% 1/8W	28480	0698-3158
A5R108	0684-1031		R:FXD COMP 10K OHM 10% 1/4W	01121	CB 1031
A5R109	0757-0948		R:FXD FLM 10K OHM 2% 1/8W	28480	0757-0948
A5R110	0757-0442	4	R:FXD MET FLM 10.0K OHM 1% 1/8W	28480	0757-0442
A5R111	0757-0972	5	R:FXD FLM 100K OHM 2% 1/8W	28480	0757-0972
A5R112	0757-0442		R:FXD MET FLM 10.0K OHM 1% 1/8W	28480	0757-0442
A5R113	0757-0972		R:FXD FLM 100K OHM 2% 1/8W	28480	0757-0972
A5R114	0684-1041		R:FXD COMP 100K OHM 10% 1/4W	01121	CB 1041
A5R115	0757-0338	1	R:FXD MET FLM 1.00K OHM 1% 1/4W	28480	0757-0338
A5R116	0684-1031		R:FXD COMP 10K OHM 10% 1/4W	01121	CB 1031
A5R117	0757-0972		R:FXD FLM 100K OHM 2% 1/8W	28480	0757-0972
A5R118	0684-1031		R:FXD COMP 10K OHM 10% 1/4W	01121	CB 1031
A5R119	0684-1031		R:FXD COMP 10K OHM 10% 1/4W	01121	CB 1031
A5R120	0767-0008	1	R:FXD MET OX 10K OHM 5% 3W	28480	0767-0008
A5R121	0757-0760	1	R:FXD FLM 20K OHM 1% 1/4W	28480	0757-0760
A5R122	0698-0082	1	R:FXD MET FLM 464 OHM 1% 1/8W	28480	0698-0082

See introduction to this section for ordering information

Table 6-2. Replaceable Parts (Cont'd)

Reference Designation	HP Part Number	Qty	Description	Mfr Code	Mfr Part Number
A5R123	0757-0481	1	R:FXD MET FLM 475K OHM 1% 1/8W	28480	0757-0481
A5R124	0684-1031		R:FXD COMP 10K OHM 10% 1/4W	01121	CB 1031
A5R125	0684-1031		R:FXD COMP 10K OHM 10% 1/4W	01121	CB 1031
A5R126	0684-1031		R:FXD COMP 10K OHM 10% 1/4W	01121	CB 1031
A5R127	0684-0271		R:FXD COMP 2.7 OHM 10% 1/4W	01121	CB 27G1
A5R128	0684-2201	1	R:FXD COMP 22 OHM 10% 1/4W	01121	CB 2201
A5R129	0684-0271		R:FXD COMP 2.7 OHM 10% 1/4W	01121	CB 27G1
A5R130	0757-0948		R:FXD FLM 10K OHM 2% 1/8W	28480	0757-0948
A5R131	0757-0447	1	R:FXD MET FLM 16.2K OHM 1% 1/8W	28480	0757-0447
A5R132	0698-3450	1	R:FXD MET FLM 42.2K OHM 1% 1/8W	28480	0698-3450
A5R133			NOT ASSIGNED		
A5R134	0698-5569	1	R:FXD MET OX 1500 OHM 2% 1W	28480	0698-5569
A5R135	0764-0046	1	R:FXD MET OX 33K OHM 5% 2W	28480	0764-0046
A5R136	0698-5984	1	R:FXD MET FLM 88.1K OHM 1.0% 1/2W	28480	0698-5984
A5R137	0684-1021		R:FXD COMP 1000 OHM 10% 1/4W	01121	CB 1021
A5R138	0698-3451	1	R:FXD MET FLM 133K OHM 1% 1/8W	28480	0698-3451
A5R139	0757-0470	1	R:FXD MET FLM 162K OHM 1% 1/8W	28480	0757-0470
A5R140	0684-2211		R:FXD COMP 220 OHM 10% 1/4W	01121	CB 2211
A5R141	0698-6713	1	R:FXD MET FLM 24.3 MEGOHM 1% 1/2W	28480	0698-6713
A5R142	0757-0832		R:FXD MET FLM 4.75K OHM 1% 1/2W	28480	0757-0832
A5R143	0757-0948		R:FXD FLM 10K OHM 2% 1/8W	28480	0757-0948
A5R144	0757-0281	1	R:FXD MET FLM 2.74K OHM 1% 1/8W	28480	0757-0281
A5R145	0757-0931	1	R:FXD FLM 2K OHM 2% 1/8W	28480	0757-0931
A5R146	0757-0972		R:FXD FLM 100K OHM 2% 1/8W	28480	0757-0972
A5R147	0757-0839	2	R:FXD MET FLM 10K OHM 1% 1/2W	28480	0757-0839
A5R148	0698-3416	1	R:FXD MET FLM 21.5K OHM 1% 1/2W	28480	0698-3416
A5R149	0684-2231		R:FXD COMP 22K OHM 10% 1/4W	01121	CB 2231
A5R150			NOT ASSIGNED		
A5R151	0684-1031		R:FXD COMP 10K OHM 10% 1/4W	01121	CB 1031
A5R152	0757-0948		R:FXD FLM 10K OHM 2% 1/8W	28480	0757-0948
A5R153	0757-0954	1	R:FXD FLM 18K OHM 2% 1/8W	28480	0757-0954
A5R154	0757-0951	2	R:FXD FLM 13K OHM 2% 1/8W	28480	0757-0951
A5R155	0757-0976		R:FXD FLM 150K OHM 2% 1/8W	28480	0757-0976
A5R156	0757-0839		R:FXD MET FLM 10K OHM 1% 1/2W	28480	0757-0839
A5R157	0684-1031		R:FXD COMP 10K OHM 10% 1/4W	01121	CB 1031
A5R158	0757-0367		R:FXD MET FLM 100K OHM 1% 1/2W	28480	0757-0367
A5R159	0684-4731		R:FXD COMP 47K OHM 10% 1/4W	01121	CB 4731
A5R160			NOT ASSIGNED		
A5R161	0684-2741	1	R:FXD COMP 270K OHM 10% 1/4W	01121	CB 2741
A5R162	0684-4741		R:FXD COMP 470K OHM 10% 1/4W	01121	CB 4741
A5R163	0684-8231	1	R:FXD COMP 82K OHM 10% 1/4W	01121	CB 8231
A5R164	0757-0951		R:FXD FLM 13K OHM 2% 1/8W	28480	0757-0951
A5R165	0757-0972		R:FXD FLM 100K OHM 2% 1/8W	28480	0757-0972
A5R166	0684-4731		R:FXD COMP 47K OHM 10% 1/4W	01121	CB 4731
A5R167			NOT ASSIGNED		
A5R168	0684-1531		R:FXD COMP 15K OHM 10% 1/4W	01121	CB 1531
A5R169	0684-0271		R:FXD COMP 2.7 OHM 10% 1/4W	01121	CB 27G1
A5R170	0684-0271		R:FXD COMP 2.7 OHM 10% 1/4W	01121	CB 27G1
A5R171	0684-0271		R:FXD COMP 2.7 OHM 10% 1/4W	01121	CB 27G1
A5R172	0684-0271		R:FXD COMP 2.7 OHM 10% 1/4W	01121	CB 27G1
A5R173	0757-0401		R:FXD MET FLM 100 OHM 1% 1/8W	28480	0757-0401
A5R174	0757-0401		R:FXD MET FLM 100 OHM 1% 1/8W	28480	0757-0401
A5R175	0757-0442		R:FXD MET FLM 10.0K OHM 1% 1/8W	28480	0757-0442
A5R176	0757-0752	1	R:FXD MET FLM 8.25K OHM 1% 1/4W	28480	0757-0752
A5R177	0757-0406	1	R:FXD MET FLM 182 OHM 1% 1/8W	28480	0757-0406
A5R178	0757-0410	2	R:FXD MET FLM 301 OHM 1% 1/8W	28480	0757-0410
A5R179	0757-0755	2	R:FXD FLM 12.1K OHM 1% 1/4W	28480	0757-0755
A5R180	0757-0410		R:FXD MET FLM 301 OHM 1% 1/8W	28480	0757-0410
A5R181	0757-0755		R:FXD FLM 12.1K OHM 1% 1/4W	28480	0757-0755
A5R182	0757-0442		R:FXD MET FLM 10.0K OHM 1% 1/8W	28480	0757-0442
A5R183	0757-0196	2	R:FXD MET FLM 6.19K OHM 1% 1/2W	28480	0757-0196
A5R184	0757-0196		R:FXD MET FLM 6.19K OHM 1% 1/2W	28480	0757-0196
A5R185	0757-0465		R:FXD MET FLM 100K OHM 1% 1/8W	28480	0757-0465
A5R186	0684-1021		R:FXD COMP 1000 OHM 10% 1/4W	01121	CB 1021
A5R187	0684-2211		R:FXD COMP 220 OHM 10% 1/4W	01121	CB 2211
A5R188	0684-1021		R:FXD COMP 1000 OHM 10% 1/4W	01121	CB 1021
A5R189	0757-0749	1	R:FXD FLM 6190 OHM 1% 1/4W	28480	0757-0749
A5R190	0684-4711	1	R:FXD COMP 470 OHM 10% 1/4W	01121	CB 4711
A5R191	0757-0340	1	R:FXD MET FLM 10.0K OHM 1% 1/4W	28480	0757-0340
A5SCR1	1884-0074	1	RECTIFIER:SI JEDEC TYPE 2N5060	04713	2N5060
A5VR1	1902-3393	1	DIODE BREAKDOWN:75.0V 5%	28480	1902-3393
A5VR2	1902-3104	1	DIODE:BREAKDOWN 5.62V 5%	04713	SZ10939-110
A5VR3	1902-0172	1	DIODE BREAKDOWN:17.8V 10%	28480	1902-0172
A5VR4	1902-0038	1	DIODE BREAKDOWN:45.3V 5%	28480	1902-0038
A5VR5	1902-3203	1	DIODE BREAKDOWN:SILICON 14.7V 5%	28480	1902-3203

See introduction to this section for ordering information

Table 6-2. Replaceable Parts (Cont'd)

Reference Designation	HP Part Number	Qty	Description	Mfr Code	Mfr Part Number
A5VR6	1902-0074	1	DIODE:BREAKDOWN 7.15V 5%	04713	SZ10939-140
A5VR7	1902-3323	1	DIODE BREAKDOWN:42.2V 5% 400MW	28480	1902-3323
A5VR8	1902-3139	1	DIODE:BREAKDOWN 8.25V 5%	04713	SZ10939-158
A5VR9	1902-3182	2	DIODE BREAKDOWN:SILICON 12.1V 5%	28480	1902-3182
A5VR10	1902-3182		DIODE BREAKDOWN:SILICON 12.1V 5%	28480	1902-3182
A6	01331-66507	1	STORE TIME ASSY	28480	01331-66507
A6 R1	0757-0462		R:FXD MET FLM 75.0K OHM 1% 1/8W	28480	0757-0462
A6 R2	2100-2981	1	R:VAR COMP 1 MEGOHM 20% LIN 1/4W	28480	2100-2981
A7	01331-61103	1	HIGH VOLTAGE TRIPLER ASSY	28480	01331-61103
A7 MP1	00180-41214	1	CLAMP:CRT LEAD	28480	00180-41214
A7 MP2			NOT ASSIGNED		
A7 MP3	00181-47101	4	GASKET:HIGH VOLTAGE CONNECTOR	28480	00181-47101
A7 MP4	00181-47102	3	GASKET:HIGH VOLTAGE CONNECTOR	28480	00181-47102
A7 R1	0687-1021	2	R:FXD COMP 1000 OHM 10% 1/2W	01121	EB 1021
A7 R2	0687-1021		R:FXD COMP 1000 OHM 10% 1/2W	01121	EB 1021
A8	01331-61901	1	SWITCH PUSHBUTTON ASSY	28480	01331-61901

Table 6-3. List of Manufacturer's Code

MFR NO.	MANUFACTURER NAME	ADDRESS	ZIP CODE
00000	U.S.A. COMMON	ANY SUPPLIER OF U.S.A.	
01121	ALLEN BRADLEY CO.	MILWAUKEE, WIS.	53204
02660	AMPHENOL CORP.	BROADVIEW, ILL.	60153
04713	MOTOROLA SEMICONDUCTOR PROD.INC.	PHOENIX, ARIZ.	85008
07263	FAIRCHILD CAMERA & INST. CORP. SEMICONDUCTOR DIV.	MOUNTAIN VIEW, CALIF.	94040
08806	G.E. CO. MINIATURE LAMP DEPT.	CLEVELAND, OHIO	44112
13019	AIRCO SUPPLY CO. INC.	WITCHITA, KANS.	67213
13103	THERMALLOY CO.	DALLAS, TEX.	75247
15636	ELEC-TROL INC.	NORTHRIDGE, CALIF.	91325
24931	SPECIALTY CONNECTOR CO. INC.	INDIANAPOLIS, IND.	46227
28480	HEWLETT-PACKARD CO. CORPORATE HQ	YOUR NEAREST HP OFFICE	
56289	SPRAGUE ELECTRIC CO.	N. ADAMS, MASS.	01247
70903	BELDEN CORP.	CHICAGO, ILL.	60644
71400	BUSSMANN MFG. DIV. MC GRAW-EDISON CO.	ST. LOUIS, MO.	63017
71744	CHICAGO MINIATURE LAMP WORKS	CHICAGO, ILL.	60640
72136	ELECTRO MOTIVE MFG. CO. INC.	WILLIMANTIC, CONN.	06226
72982	ERIE TECHNOLOGICAL PROD. INC.	ERIE, PA.	16512
75915	LITTELFUSE INC.	DES PLAINES, ILL.	60016
78488	STACKPOLE CARBON CO.	ST. MARYS, PA.	15857
79727	CONTINENTAL-WIRT ELECTRONICS CORP.	WARMINSTER, PA.	18974
80131	ELECTRONIC INDUSTRIES ASSOCIATION	WASHINGTON D.C.	20006
82389	SWITCHCRAFT INC.	CHICAGO, ILL.	60630
91418	RADIO MATERIALS CO.	CHICAGO, ILL.	60646
91506	AUGAT INC.	ATTLEBORO, MASS.	02703
95354	METHODE MFG. CO.	ROLLING MEADOWS, ILL.	60008

See introduction to this section for ordering information

SECTION VII

MANUAL CHANGES AND OPTIONS

7-1. INTRODUCTION.

7-2. This section contains information required to backdate or update this manual for a specific instrument. Description of special options and standard options are also in this section.

7-3. MANUAL CHANGES.

7-4. This manual applies directly to instruments having the same serial prefix shown on the title page of this manual. If the serial prefix of the instrument is different from the one on the title page, the manual should be corrected. For larger serial prefixes, the manual should be updated as instructed in Supplement A to this manual. Supplement A is normally supplied with the manual. For smaller serial prefixes, the manual should be backdated as instructed in Supplement B. Supplement B must be ordered from your nearest HP Sales/Service Office (refer to the rear of this manual for addresses). When ordering either Supplement A or Supplement B, give the complete name and model number of your instrument as well as the complete serial number. Also give the HP Part Number (on title page) of your manual.

7-5. When using Supplement A, make all errata changes first; then make all changes listed for your serial prefix, starting with the lowest numbered change.

7-6. When using Supplement B, make all changes listed for your serial prefix, starting with the highest numbered change.

7-7. SPECIAL OPTIONS.

7-8. Most customer special application requirements and/or specifications can be met by factory modification of a standard instrument. A standard instrument modified in this way will carry a special option number, such as Model 0000A/Option C01.

7-9. An operating and service manual and a manual insert are provided with each special option instrument. The operating and service manual contains information about the standard instrument. The manual insert for the special option describes the factory modifications required to produce the special option instrument. Amend the operating and service manual by changing it to include all manual insert information (and MANUAL CHANGES sheet information, if applicable). When these changes are made, the operating and service manual will apply to the special option instrument.

7-10. If you have ordered a special option instrument and the manual insert is missing, notify the nearest Hewlett-Packard Sales/Service Office. Be sure to give a full description of the instrument, including the complete serial number and special option number.

7-11. STANDARD OPTIONS.

7-12. Standard options are modifications installed on HP instruments at the factory and are available on request. Contact the nearest Hewlett-Packard Sales/Service Office for information concerning standard options.

7-13. Option X95. Option X95 provides a standard Model 1331A whose external covers match the color scheme of Hewlett-Packard instruments manufactured prior to the adoption of the current HP color scheme. To adapt this manual for use with Option X95 instruments, amend table 6-2 as follows:

MP6: Change HP Part No. and Mfr. Part No. to 01331-04102.
MP7: Change HP Part No. and Mfr. Part No. to 01331-04101.
MP8: Change HP Part No. and Mfr. Part No. to 01331-04103.

7-14. Option 631. Option 631 provides a standard Model 1331A with a CRT without the internal graticule. To adapt this manual for use with Option 631 instruments, amend table 6-2 as follows:

V1: Change HP Part No. and Mfr. Part No. to 5083-9180.

SECTION VIII

SCHEMATICS AND TROUBLESHOOTING

8-1. INTRODUCTION.

8-2. This section contains schematics, repair and replacement information, component-identification illustrations, waveforms, and test conditions. Table 8-1 defines symbols and conventions used on the schematics. A disassembly procedure for removing the CRT is also contained in this section.

8-3. SCHEMATICS.

8-4. Schematics are printed on foldout pages for easy reference to the text and figures in other sections. The schematics are drawn to show the electronic function of the circuits. Any one schematic may include all or part of several different physical assemblies. Non MIL-standard symbols and conventions used in the schematics are defined in table 8-1.

8-5. The schematics are numbered in sequence with a bold number at the lower right-hand corner of each page. These numbers are used to cross reference signal connections between the schematics. At each circuit breaking point, a number in a circle is shown, followed by another number in bold type. The circled number indicates the signal or circuit and the bold number indicates the associated schematic that contains the source or destination of the signal. To find the source or destination of the signal, turn to the indicated schematic and find the circled number in question.

8-6. A table on each schematic lists all components shown on the schematic by reference designation. Component reference designators that have been deleted from the schematic are listed below the table.

8-7. All components within the inclosed areas of the schematic are physically located on etched circuit boards. Components not physically located on an etched circuit board are shown in the uninclosed areas of the schematic.

8-8. REFERENCE DESIGNATIONS.

8-9. The unit system of reference designations used in this manual is in accordance with the provisions of USA Standard Y32.16-1968, Reference Designations for Electrical and Electronics Parts and Equipments, dated March 1, 1968. Minor variations from the standard, due to design and manufacturing practices, may be noted.

8-10. Each electrical component is assigned a class letter and a number. This letter-number combination is the basic reference designation. Components which are part of an assembly have, in addition to the basic designation, a prefix designation indicating the assembly of which the component is a part. For instance, resistor R23 on assembly A1 is called A1R23.

8-11. Assemblies are numbered consecutively. If an assembly reference designation is assigned and later deleted, that number is not reused.

8-12. COMPONENT LOCATIONS.

8-13. Locations of components on assemblies and subassemblies are illustrated on photographs adjacent to the schematics. Since the schematics are drawn to shown function, portions of a particular assembly may appear on several different schematics. The component-location photograph is printed next to the schematic that shows most of the circuitry on the assembly. In some cases, a particular component-location photograph may appear adjacent to more than one schematic.

8-14. The locations of all adjustments are shown in Section V.

8-15. PREVENTIVE MAINTENANCE.

8-16. Preventive maintenance consists of periodic performance checks, calibration, mechanical inspection, lubrication, and other services designed to prevent breakdown and failure. Performance checks and calibration are covered in Section V of this manual. The other preventive maintenance services are covered in the following paragraphs.

8-17. MECHANICAL INSPECTION.

8-18. Periodically inspect the instrument for damaged components, excess grease, dirt, and corrosion. Look for loose and misaligned assemblies. Ensure that all screws and fasteners are tight and serviceable.

8-19. Refer to the paragraphs in this section on repair and replacement for instructions on replacing damaged components.

8-20. CLEANING.

8-21. Painted, glass, and plastic surfaces can be cleaned with a commercial, spray-type, window

cleaner or with a mild soap and water solution. Excess grease can be removed with a degreaser such as M-180 FREON TF DEGREASER produced by Miller-Stevenson Company.

8-22. Corroded spots are best removed with soap and water. Stubborn residues can be removed with a fine abrasive. When using abrasives, be careful that fine particules do not fall into the instrument. Such areas should be protected from further corrosion by an application of a silicone resin such as GE DRI-FILM 88.

8-23. SWITCH MAINTENANCE.

8-24. The pushbutton switches used in this instrument have been designed for long, trouble-free service. In the event that one of these switches becomes defective, replacement rather than repair is recommended.

8-25. REPAIR AND REPLACEMENT.

8-26. The following paragraphs provide procedures for replacement of assemblies, subassemblies, and components. Special servicing instructions for the etched circuit boards are provided in paragraph 8-32. Section VI provides a detailed parts lists for use in ordering replacement parts.

8-27. CRT REMOVAL AND INSTALLATION.

WARNING

To prevent personal injury, wear a face mask or goggles when handling the CRT. Wear protective gloves and handle the CRT carefully.

8-28. To remove the CRT, proceed as follows:

a. Remove top, bottom, and both side covers.

b. Remove two screws in left frame MP4 holding high voltage power supply board A3.

c. Disengage high voltage power supply board from its socket (not necessary to remove board entirely).

d. Reach under high voltage power supply board and remove wires from CRT neck pins.

e. Remove contrast screen MP31 by pulling upwards.

f. Remove CRT bezel MP23 by removing four screws.

g. Remove CRT socket cover MP17 by removing four screws.

h. Loosen CRT base clamp screw on CRT shield support MP19.

i. Remove two screws in right frame MP5 holding low voltage rectifier board A2.

j. Slide low voltage rectifier board toward top of instrument (not necessary to remove board entirely).

k. Remove collimator lead from CRT by grasping center of dot fastener with long nose pliers and pulling directly away from CRT.

l. Remove two screws holding flex lead connector A7P1.

m. Remove fiber board and 3 rubber gaskets from flex lead connector A7P1.

WARNING

Both the CRT post accelerator and the high voltage tripler can retain a potentially dangerous charge. Discharge both to chassis before handling.

n. Remove flex lead from flex lead connector.

CAUTION

Attempting to remove the CRT socket at an angle can break the CRT base and keyway.

o. Gently pry CRT socket from CRT base.

p. Grasp CRT flex lead with one hand and place fingers of other hand against base of CRT.

q. Apply steady forward pressure to base of CRT while guiding flex lead through large circular hole in CRT shield.

r. When face of CRT is clear of front panel, grasp CRT at edges of face and pull forward until CRT is clear of front panel.

8-29. To install CRT, reverse removal procedure. Observe the following precautions:

a. Before tightening CRT base clamp screw on CRT shield support MP19, ensure that CRT graticule is square with front panel.

b. Before installing wires on CRT neck pins, ensure that neck pins are accuately centered in slot in CRT shield. To center, loosen two nuts holding CRT shield support MP19 to CRT shield and move shield forward or backward until pins are centered. Tighten nuts.

8-30. SEMICONDUCTOR REMOVAL AND REPLACEMENT.

8-31. Figure 8-1 is included to help identify the leads on the common shapes and sizes of semiconductor devices. When removing a semiconductor, use long-nosed pliers as a heat sink between the device and the soldering iron. When replacing a semiconductor, ensure sufficient lead length to dissipate the soldering heat by using the same length of exposed lead as used for the original part.

8-32. CIRCUIT BOARDS.

8-33. The following paragraphs provide information regarding servicing procedures for etched circuit boards.

8-34. BOARD CONNECTIONS.

8-35. Square-pin connectors are identified on circuit boards by the color code of the connecting wire. Connector pins on plugs and jacks are identified by either a numeral or a letter. The letters G, I, O, and Q have been omitted. Table 8-1 shows the types of board connections used in the instrument.

8-36. SERVICING ETCHED CIRCUIT BOARDS.

8-37. This instrument uses etched circuit boards with plated-through component holes. This allows components to be removed or replaced by unsoldering from either side of the board. When removing large components, such as potentiometers, rotate the soldering iron tip from lead to lead while applying pressure to the part to lift it from the board. HP Service Note M-20E contains additional information on repair of etched circuit boards.

8-38. HEAT SINKS.

8-39. The heat sinks used on this instrument are all of the friction type. They can be removed by carefully pulling them off. When reinstalling, support the bottom of the transistor before pushing the heat sink on. Transistor damage may result if the transistor legs are bent.

8-40. TROUBLESHOOTING.

8-41. The most important prerequisite for successful troubleshooting is understanding how the instrument is designed to operate and correct use of front panel controls. Improper control settings or circuit connections can cause apparent malfunctions. Read Section III (Operation) for an explanation of controls and connectors and general operating considerations. Read Section IV (Principles of Operation) for explanations of circuit theory.

8-42. If trouble is suspected, visually inspect the instrument. Look for loose or burned components that might suggest a source of trouble. Check to see that all circuit board connections are making good contact and are not shorting to an adjacent circuit. If no obvious trouble is found, check the power supply voltages in the instrument. Prior to any extensive troubleshooting, also check the external power sources.

8-43. DC VOLTAGES.

8-44. On some of the schematics, dc voltages are indicated for active components (transistors, etc.) Conditions for making these voltage measurements are listed adjacent to the schematics. Since the conditions for making the measurements may differ from on circuit to another, always check the specific condition listed adjacent to the schematic.

8-45. WAVEFORMS.

8-46. Waveform measurement points (illustration 11 on table 8-1) are placed on the schematics along main signal paths. The numbers inside the measurement point symbols are keyed to waveforms and waveform measurement conditions adjacent to the schematics. Like the dc voltage measurement conditions, waveform measurement conditions vary from one circuit to another.

8-47. TROUBLE ISOLATION.

8-48. The power supplies and amplifiers in Model 1331A are conventional and respond to conventional troubleshooting techniques. Schematics 1 through 6 and associated illustrations are provided as troubleshooting guides.

8-49. The pulse circuits on schematic 7 react differently for each of the instrument's modes and functions. Schematic 7 is reproduced again in figures 8-20, 8-21, and 8-22. Figure 8-20 shows signal paths, dc voltages, and waveforms for write mode. Figure 8-21 is for store mode, and figure 8-22 is for the erase function. The test equipment listed in Section V is suitable for troubleshooting the instrument.

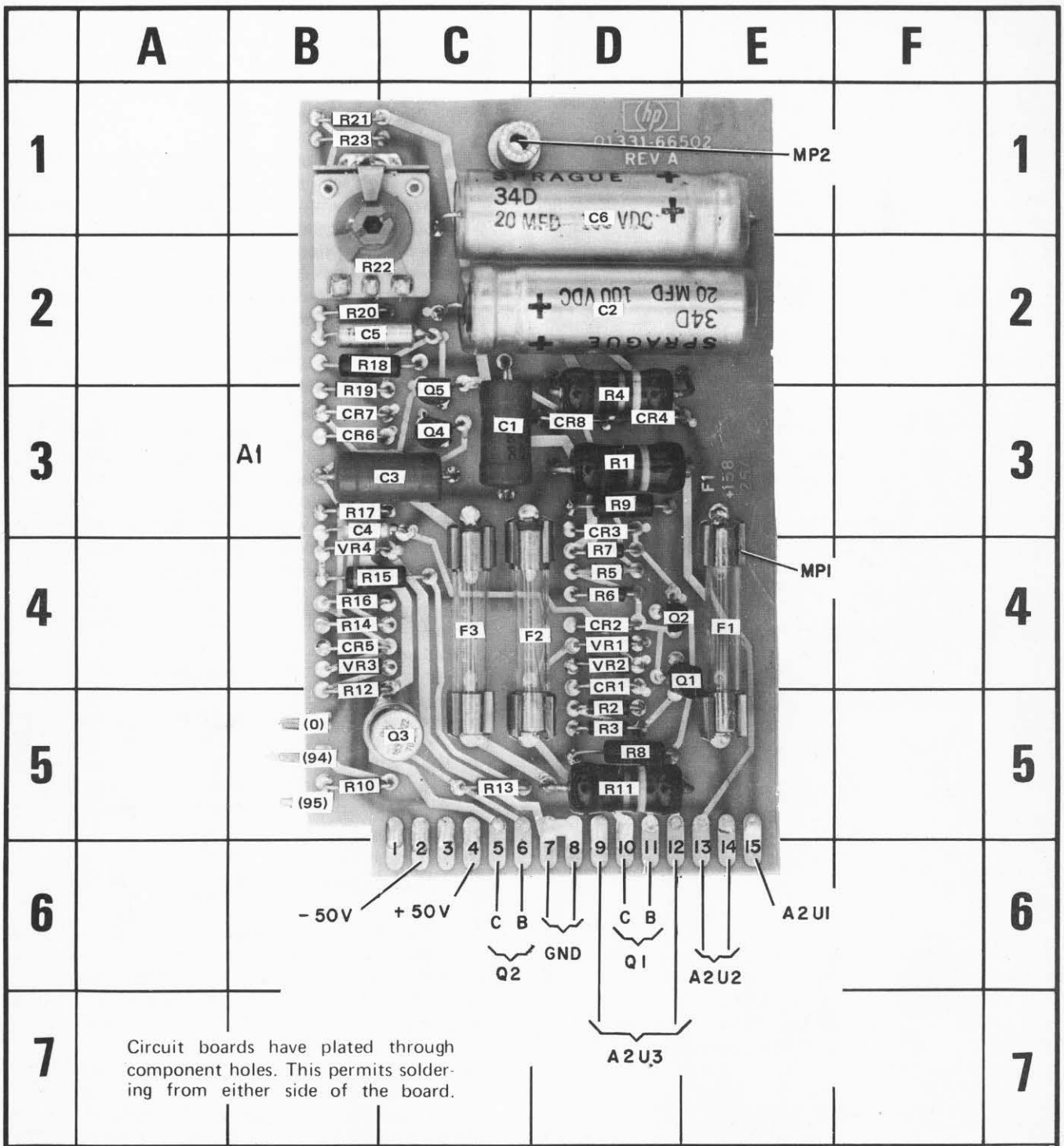

Circuit boards have plated through component holes. This permits soldering from either side of the board.

REF DESIG	GRID LOC	REF DESIG	GRID LOC	REF DESIG	GRID LOC	REF DESIG	GRID LOC	REF DESIG	GRID LOC	REF DESIG	GRID LOC
C1	C-3	CR3	D-3	F3	C-4	R3	D-5	R11	D-5	R19	B-3
C2	D-2	CR4	D-3	Q1	E-4	R4	D-3	R12	B-5	R20	B-2
C3	C-3	CR5	B-4	Q2	E-4	R5	D-4	R13	C-5	R21	B-1
C4	B-3	CR6	B-3	Q3	C-5	R6	B-3	R14	C-4	R22	B-2
C5	B-2	CR7	B-3	Q4	C-3	R7	D-4	R15	C-4	R23	B-1
C6	D-1	CR8	B-3	Q5	C-3	R8	D-5	R16	C-4	VR1	D-4
CR1	D-5	F1	E-4	R1	D-3	R9	D-3	R17	B-3	VR2	D-4
CR2	C-4	F2	D-4	R2	D-5	R10	B-5	R18	B-2	VR3	B-4
										VR4	B-4

1331A/C-A-10

Figure 8-1. A1 Component Locator

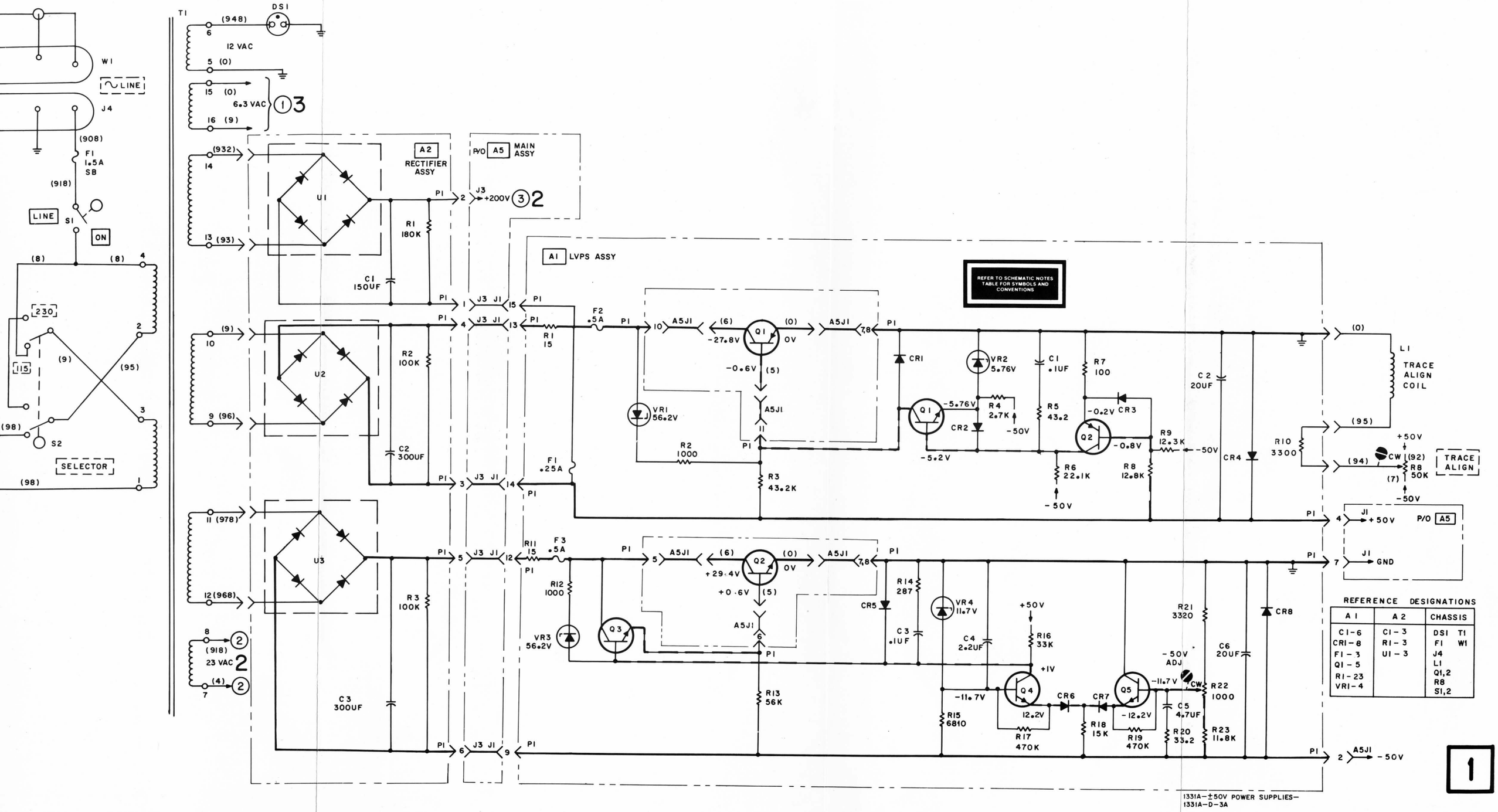

Figure 8-3.
Schematic, ±50V Power Supplies

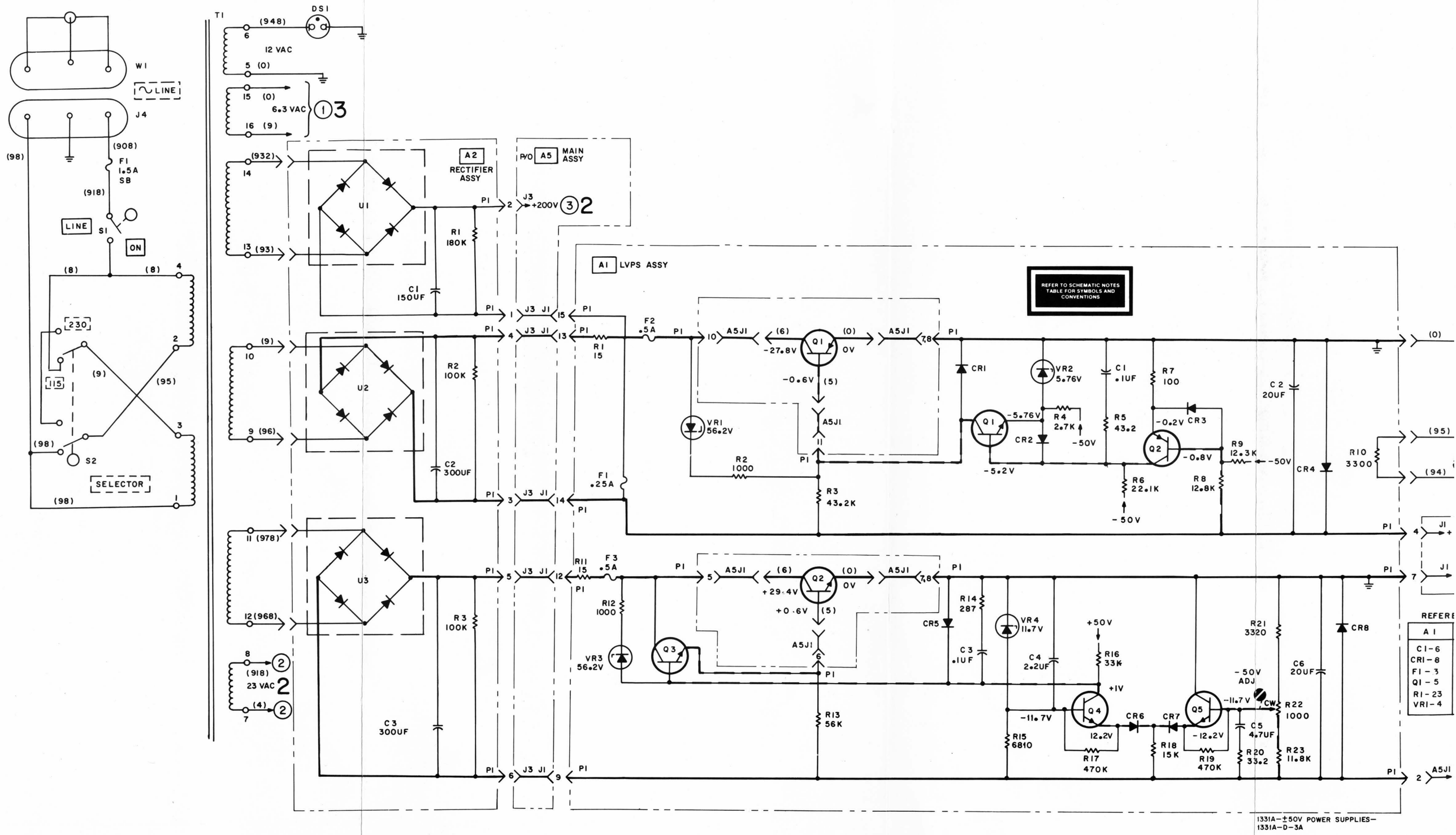
W1
LINE
J4
(98)
(908)
F1
1.5A
SB
(918)
LINE
S1
ON
(8)
(8)
4
230
115
(9)
(95)
2
3
(98)
S2
SELECTOR
(98)
1
T1
(948)
DS1
6
12 VAC
5 (0)
15 (0)
6.3 VAC
16 (9)
3
(932)
14
13 (93)
A2
RECTIFIER ASSY
U1
P1
2
J3
+200V
3
2
R1
180K
C1
150UF
P/O A5 MAIN ASSY
A1 LVPS ASSY
REFER TO SCHEMATIC NOTES TABLE FOR SYMBOLS AND CONVENTIONS
(9)
10
9 (96)
U2
R2
100K
C2
300UF
J3 J1
15
13
R1
15
F2
.5A
10
A5J1
(6)
-27.8V
Q1
(0)
0V
-0.6V
(5)
VR1
56.2V
R2
1000
R3
43.2K
F1
.25A
CR1
VR2
5.76V
C1
.1UF
R7
100
C2
20UF
-5.76V
R4
2.7K
-50V
R5
43.2
-0.2V
CR3
CR2
Q2
-0.8V
R9
12.3K
-50V
-5.2V
R6
22.1K
R8
12.8K
-50V
CR4
R10
3300
(95)
(94)
11 (978)
U3
12 (968)
R3
100K
C3
300UF
R11
15
F3
.5A
R12
1000
VR3
56.2V
Q3
+29.4V
+0.6V
Q2
(0)
0V
CR5
R14
287
C3
.1UF
VR4
11.7V
+50V
R16
33K
C4
2.2UF
+1V
R13
56K
R15
6810
-11.7V
Q4
12.2V
R17
470K
CR6
CR7
R18
15K
Q5
-11.7V
-12.2V
R19
470K
R21
3320
-50V
ADJ
CW
R22
1000
C5
4.7UF
R20
33.2
R23
11.8K
C6
20UF
CR8
8
(918)
23 VAC
2
(4)
7
REFERE
A1
C1-6
CR1-8
F1-3
Q1-5
R1-23
VR1-4
1331A—±50V POWER SUPPLIES—
1331A-D-3A

Schematic,

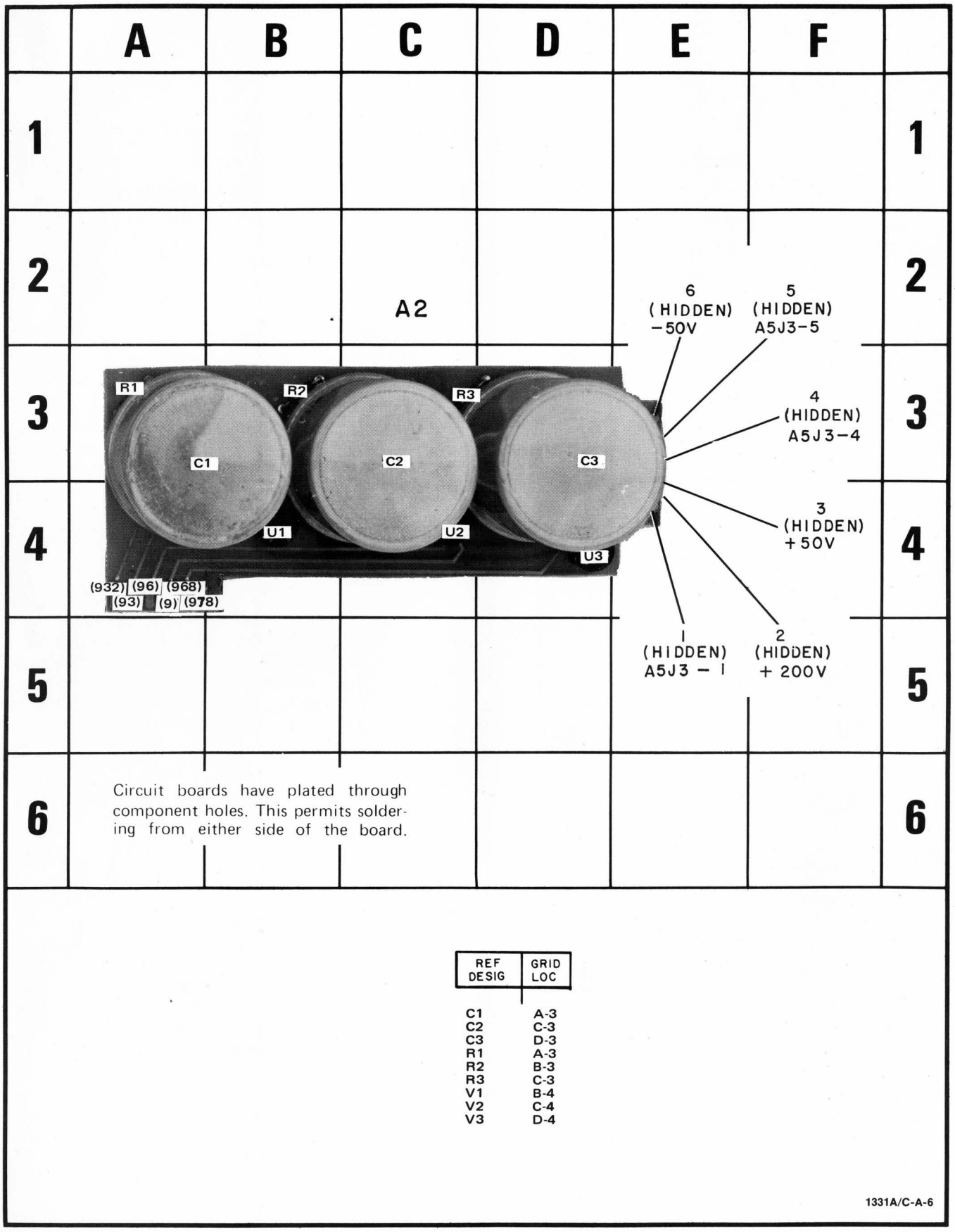

REF DESIG	GRID LOC
C1	A-3
C2	C-3
C3	D-3
R1	A-3
R2	B-3
R3	C-3
V1	B-4
V2	C-4
V3	D-4

Figure 8-2. A2 Component Locator

Table 8-1. Schematic Notes

Refer to MIL-STD-15-1A for schematic symbols not listed in this table.

1. Etched circuit board
2. Assembly
3. Etched circuit board on assembly
4. Front-panel marking
5. Rear-panel Marking
6. Front-panel control
7. Screwdriver adjustment
8. P/O — Part of
9. CW — Clockwise end of variable resistor
10. NC — No connection
11. Waveform test point (with number)
12. Clamp type connector
13. Single-pin connector on board
14. Pin of a plug-in board (with letter or number)
15. Coaxial cable connected directly to board
16. Wire connected to pressure-fit socket on board
17. Main signal path
18. Primary feedback path
19. Secondary feedback path
20. Test point
21. G D S — Field-effect transistor (N-type base)
22. Breakdown diode (voltage regulator)
23. Tunnel diode
24. Step-recovery diode
25. Circuits or components drawn with dashed lines (phantom) show function only and are not intended to be complete. The circuit or component is shown in detail on another schematic.
26. (925) Wire colors are given by numbers in parentheses using the resistor color code [(925) is wht-red-grn]

0 - black	5 - Green
1 - Brown	6 - Blue
2 - Red	7 - Violet
3 - Orange	8 - Gray
4 - Yellow	9 - White

27. * Optimum value selected at factory, typical value shown; part may have been omitted.
28. Unless otherwise indicated: resistance in ohms capacitance in picofarads inductance in microhenries

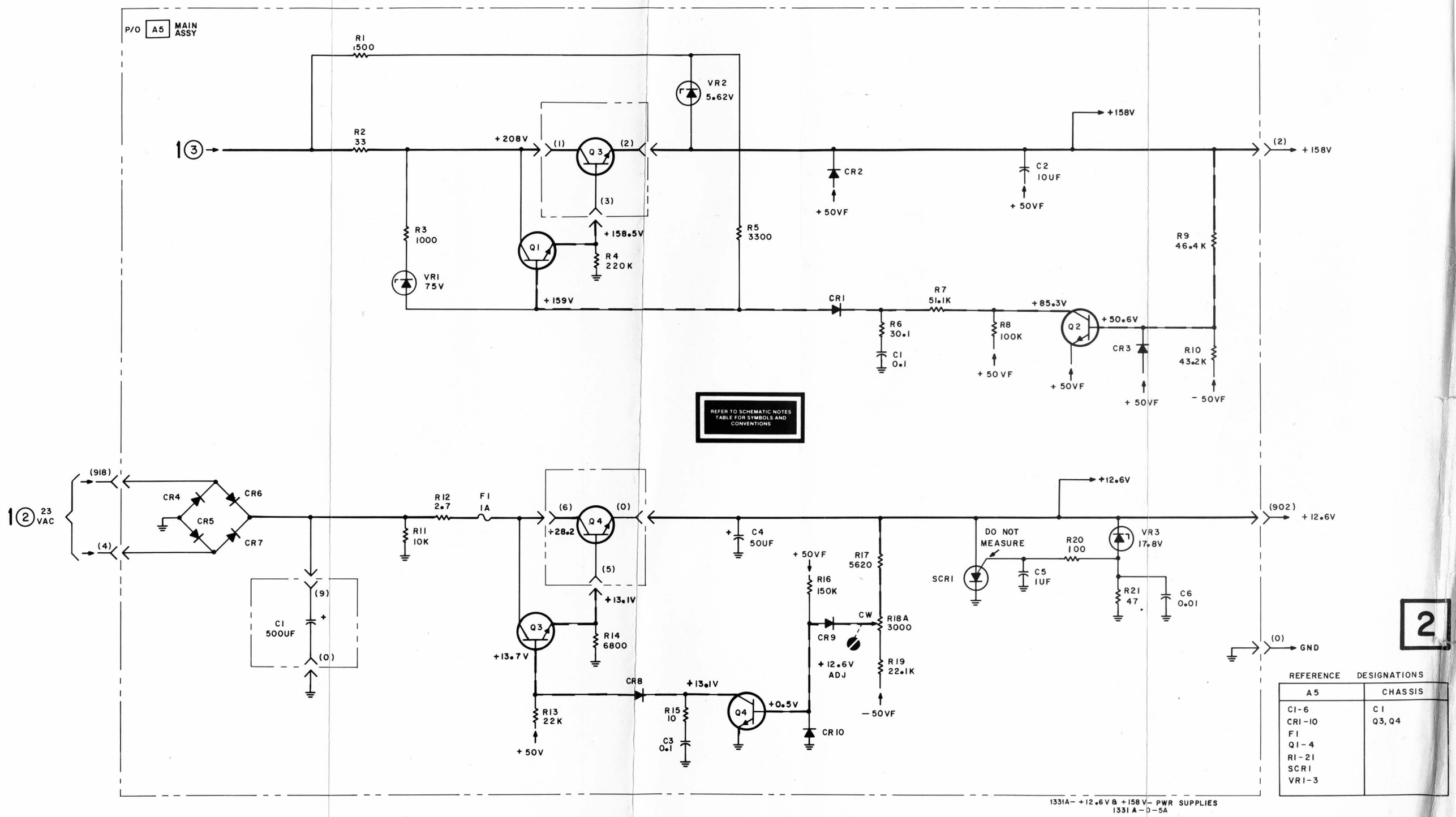

Figure 8-5.
Schematic, +158V and +12.6V Power Supplies

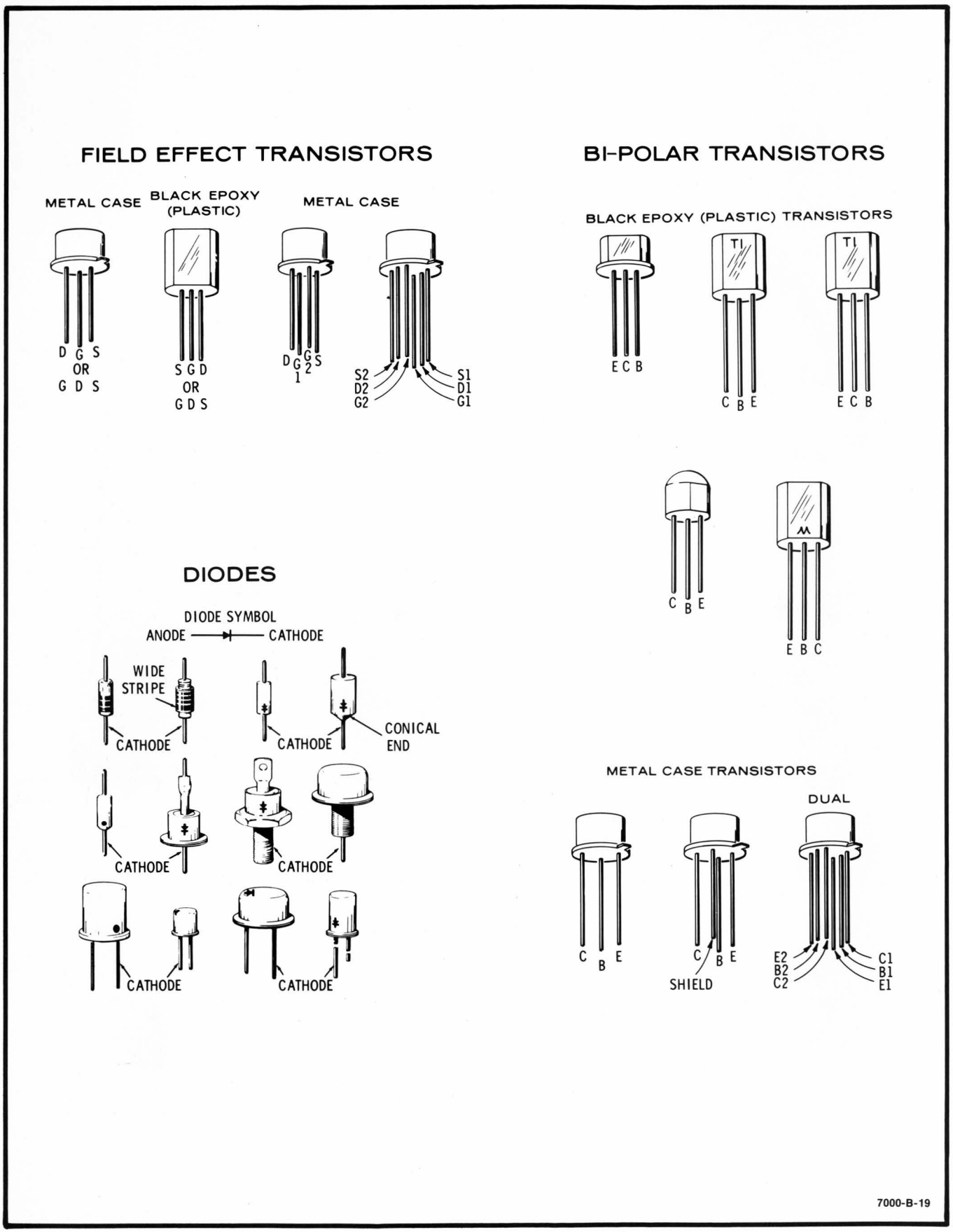

Figure 8-4. Semiconductor Terminal Identification

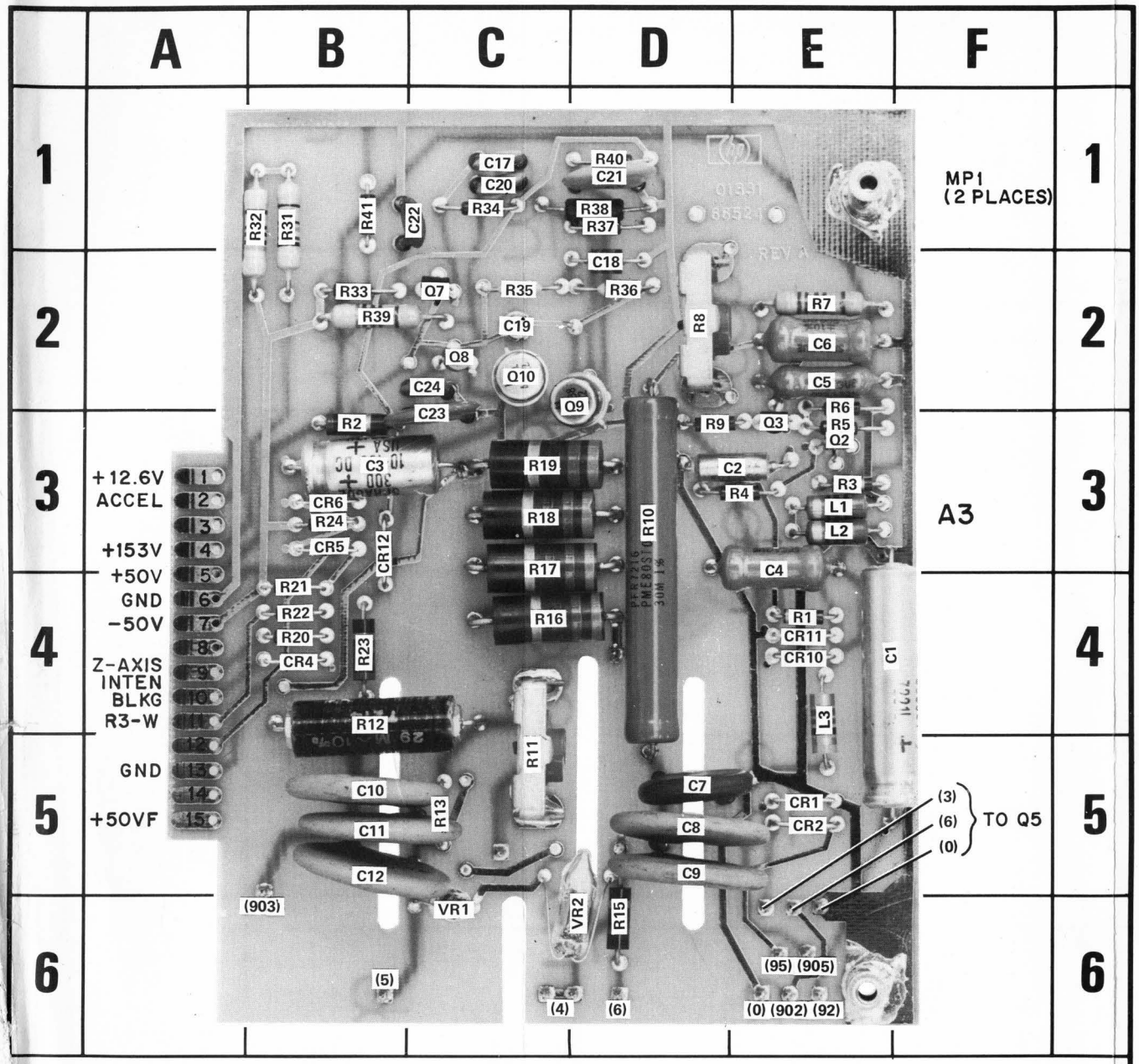

REF DESIG	GRID LOC	REF DESIG	GRID LOC	REF DESIG	GRID LOC	REF DESIG	GRID LOC	REF DESIG	GRID LOC	REF DESIG	GRID LOC	REF DESIG	GRID LOC
C1	F-4	C12	B-5	CR4	B-4	Q7	C-2	R7	E-2	R18	C-3	R34	C-1
C2	E-3	C17	C-1	CR5	B-3	Q8	C-2	R8	D-2	R19	C-3	R35	C-2
C3	B-3	C18	D-2	CR6	B-3	Q9	D-2	R9	D-3	R20	B-4	R36	D-2
C4	E-3	C19	C-2	CR10	E-4	Q10	C-2	R10	D-3	R21	B-4	R37	D-1
C5	E-2	C20	C-1	CR11	E-4	R1	E-4	R11	C-5	R22	B-4	R38	D-1
C6	E-2	C21	D-1	CR12	B-3	R2	B-3	R12	B-4	R23	B-4	R39	B-2
C7	D-5	C22	C-1	L1	E-3	R3	E-3	R13	C-5	R24	B-3	R40	D-1
C8	D-5	C23	C-3	L2	E-3	R4	E-3	R15	D-6	R31	B-1	R41	B-1
C9	D-5	C24	C-2	L3	E-4	R5	E-3	R16	C-4	R32	B-1	VR1	C-6
C10	B-5	CR1	E-5	Q2	E-3	R6	E-2	R17	C-3	R33	B-2	VR2	D-6
C11	B-5	CR2	E-5	Q3	E-3								

Figure 8-6. A3 Component Locator

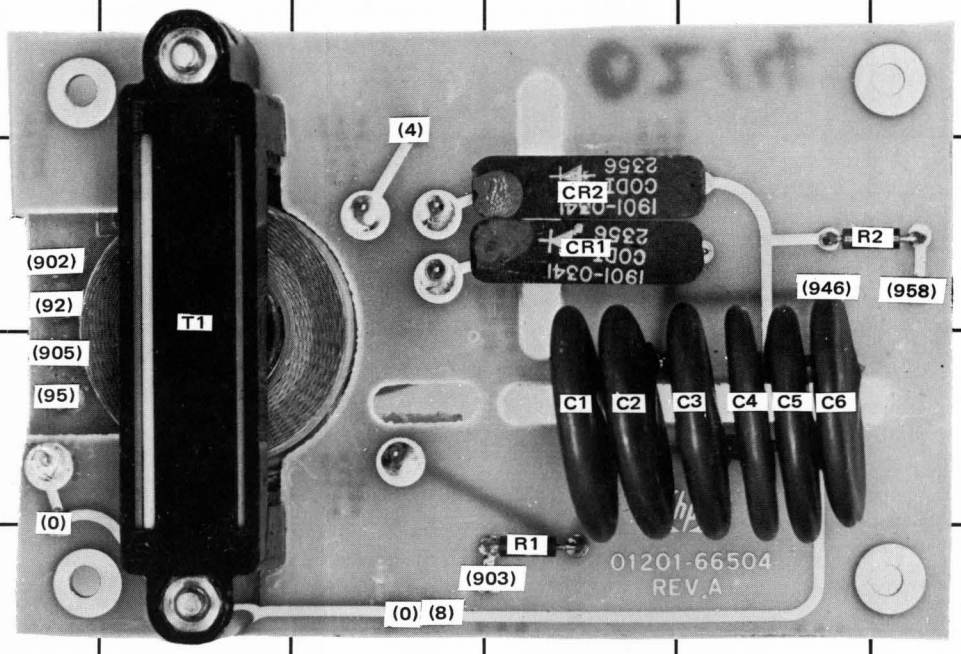

A4

Circuit boards have plated through component holes. This permits soldering from either side of the board.

REF DESIG	GRID LOC
C1	D-4
C2	D-4
C3	E-4
C4	E-4
C5	E-4
C6	E-4
CR1	D-3
CR2	D-3
R1	D-5
R2	E-3
T1	B-3

1331A/C-A-8

Figure 8-7. A4 Component Locator

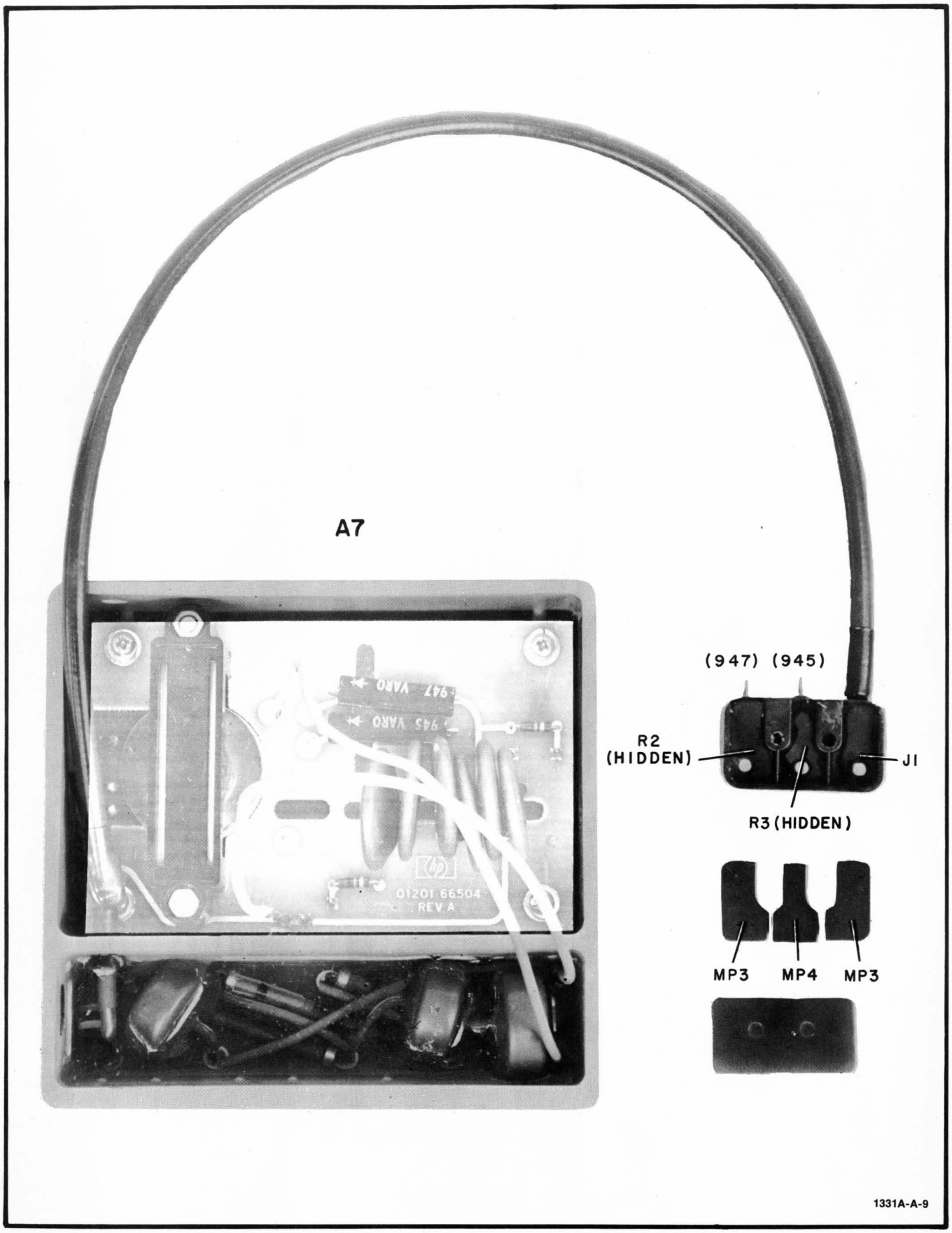

Figure 8-8. A7 Component Locator

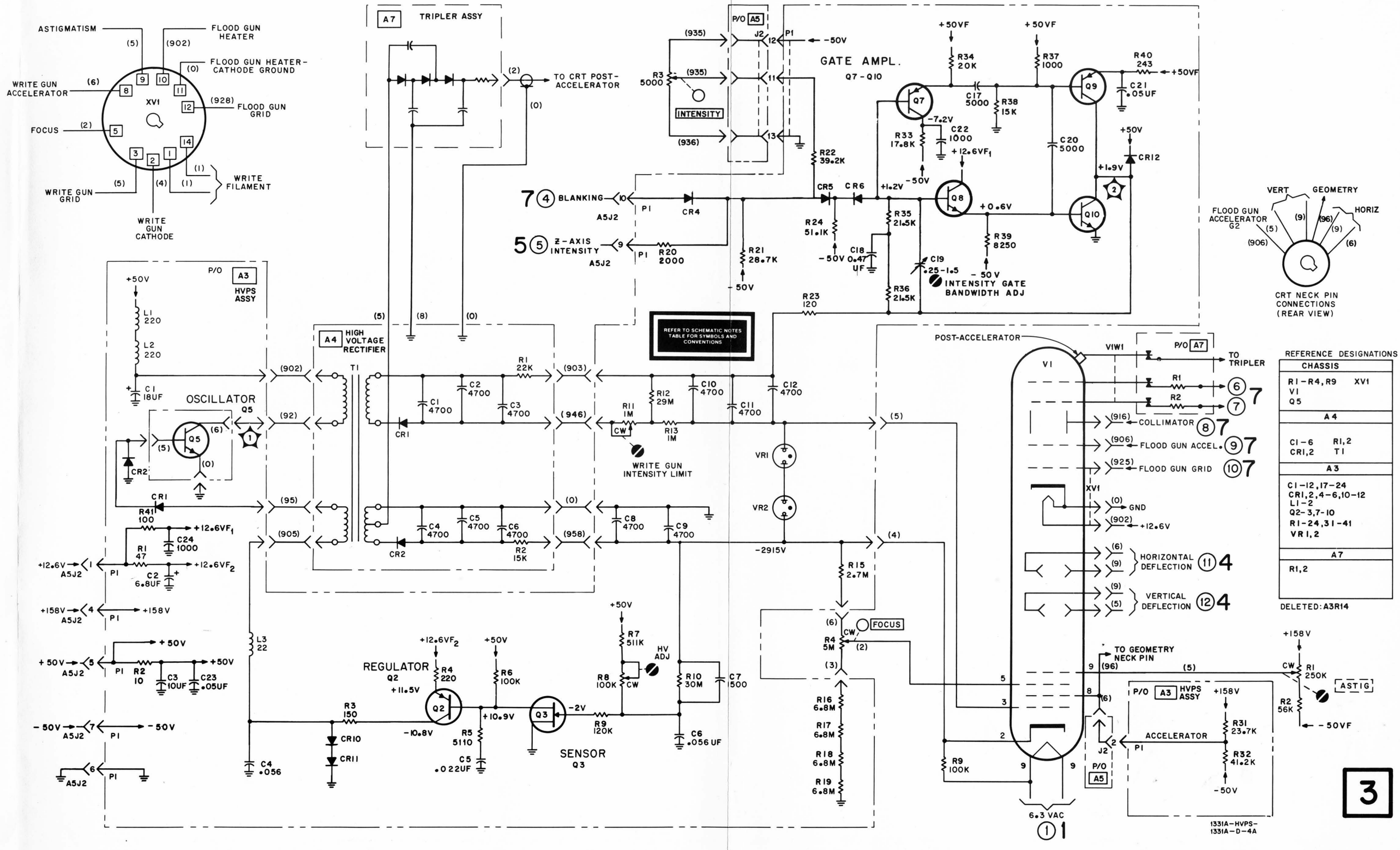

Figure 8-10.
Schematic, High Voltage Power Supply
8-9/8-10

2915

DC VOLTAGE MEASUREMENT CONDITIONS

1. Set Model 1331A controls as follows:

   STORE ..... in
   INTENSITY ..... ccw
   PERSISTENCE..... ccw
   POSITION (HORIZ and VERT) .. centered

2. Short center of X INPUT, Y INPUT and Z INPUT connectors to shield.

3. All voltages are referenced to chassis ground. All indications are nominal and may vary slightly.

WAVEFORM MEASUREMENT CONDITIONS

1 Same as dc measurement conditions.

2 Same as dc measurement conditions except:

   WRITE ..... in
   INTENSITY ..... dot barely visible
   Z INPUT ..... ground shield. Apply 2-ms, 770 Hz, 1V p-p pulse to center.

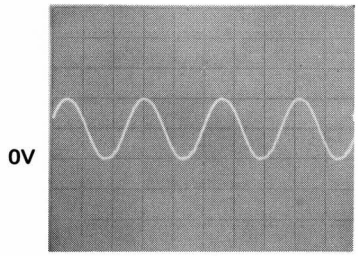

1 50 V/DIV
10 USEC/DIV

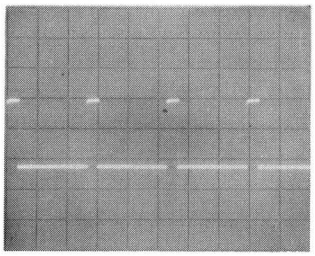

2 20 V/DIV
0.5 MS/DIV

1331A/C-B-3

Figure 8-9. Schematic 3 Measurement Conditions and Waveforms

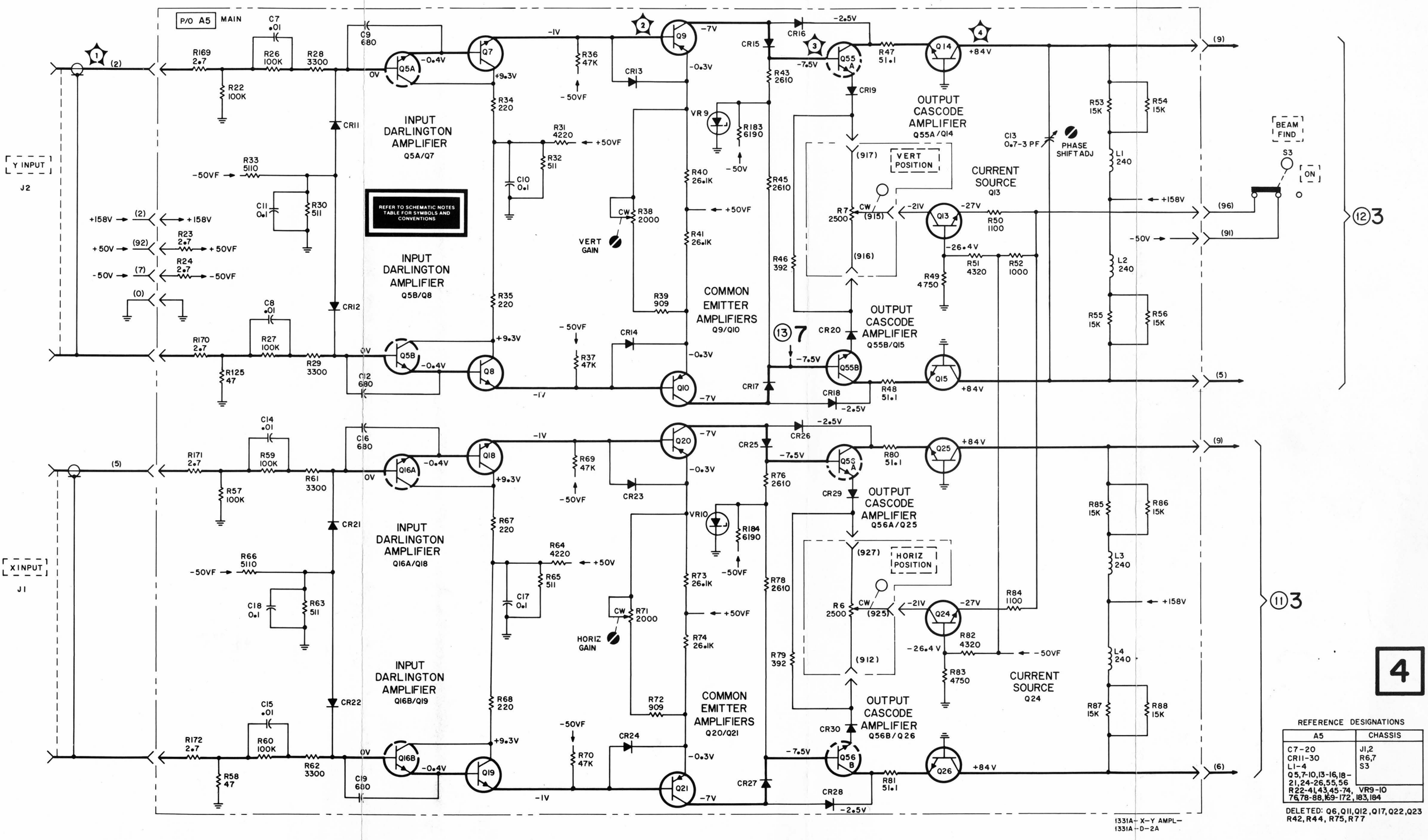

4

REFERENCE DESIGNATIONS

A5	CHASSIS
C7-20 CR11-30 L1-4 Q5,7-10,13-16,18-21,24-26,55,56 R22-41,43,45-74,76,78-88,169-172,183,184	J1,2 R6,7 S3 VR9-10

DELETED: Q6,Q11,Q12,Q17,Q22,Q23 R42,R44,R75,R77

Figure 8-12.
Schematic, X- and Y-axis Amplifiers
8-11/8-12

DC VOLTAGE MEASUREMENT CONDITIONS

1. Set Model 1331A controls as follows:

   STORE ..... in
   INTENSITY ..... ccw
   PERSISTENCE..... ccw
   POSITION (HORIZ and VERT).. centered

2. Short center of X INPUT, Y INPUT and Z INPUT connectors to shield.

3. All voltages are referenced to chassis ground. All indications are nominal and may vary slightly.

WAVEFORM MEASUREMENT CONDITIONS

Same as dc measurement conditions except:

X INPUT ..... ground shield. Apply 100 Hz. 2V p-p sine wave to center.

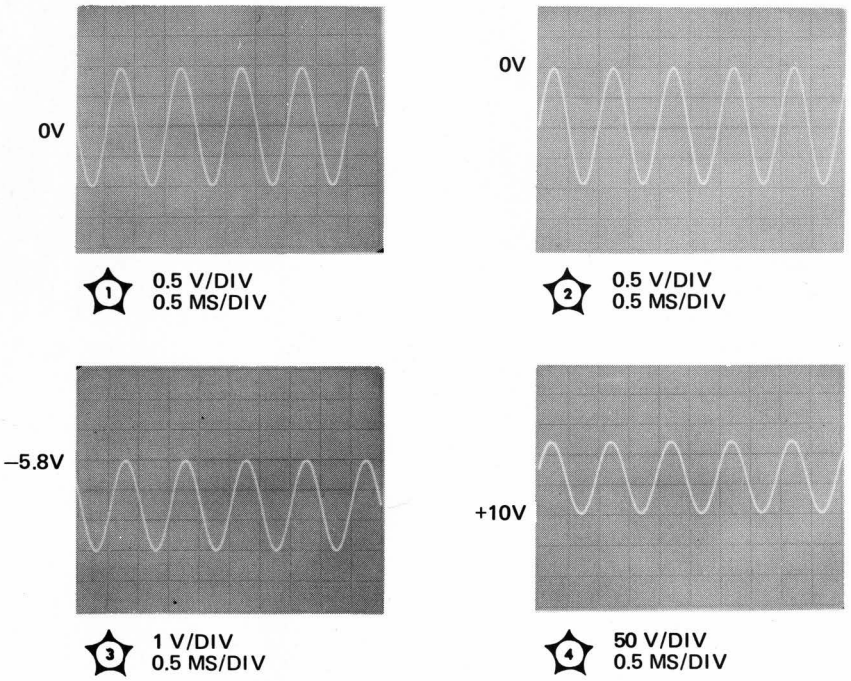

1331A/C-B-5

Figure 8-11. Schematic 4 Measurement Conditions and Waveforms

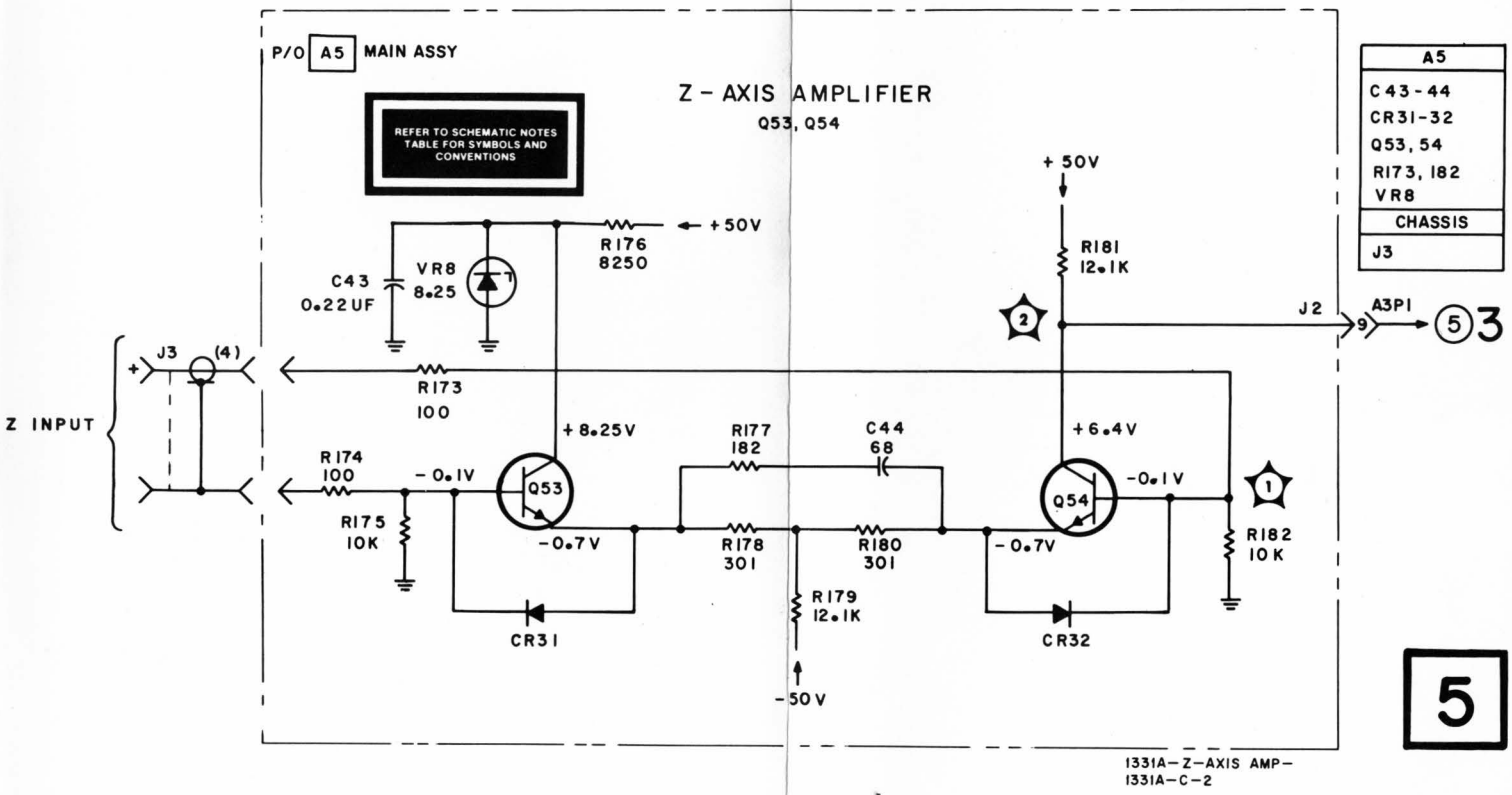

Figure 8-14.
Schematic, Z-axis Amplifier

DC VOLTAGE MEASUREMENT CONDITIONS

1. Set Model 1331A controls as follows:

   STORE ..... in
   INTENSITY ..... ccw
   PERSISTENCE ..... ccw
   POSITION (HORIZ and VERT) .. centered

2. Short center of X INPUT, Y INPUT and Z INPUT connectors to shield.

3. All voltages are referenced to chassis ground. All indications are nominal and may vary slightly.

WAVEFORM MEASUREMENT CONDITIONS

Same as dc measurement conditions except:

WRITE ..... in
INTENSITY ..... dot barely visible
Z INPUT ..... ground shield. Apply 2-ms, 770 Hz, 1V p-p pulse to center.

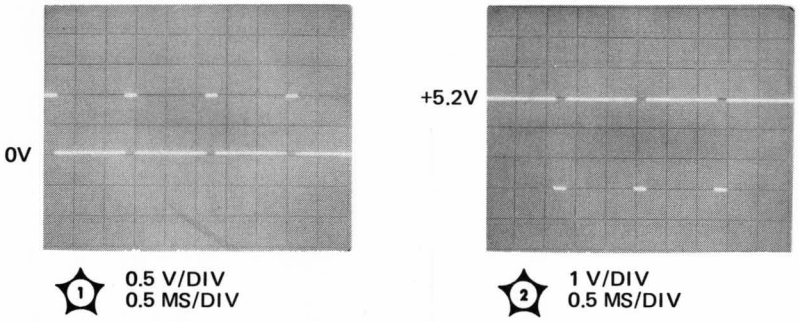

1331A/C-B-6

Figure 8-13. Schematic 5 Measurement Conditions and Waveforms

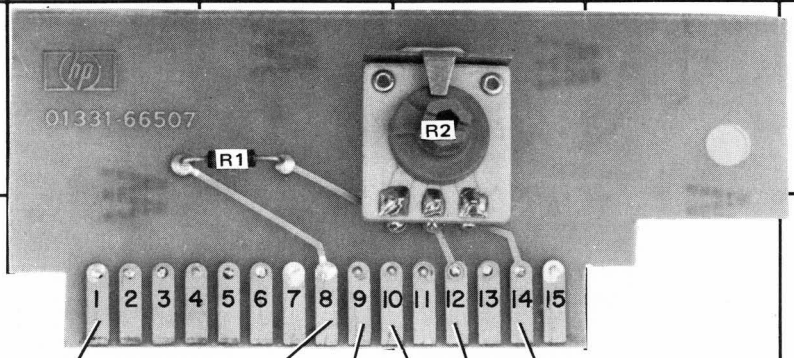

A6

Circuit boards have plated through component holes. This permits soldering from either side of the board.

REF DESIG	GRID LOC
R1	C-3
R2	D-3

1331A/C-A-7

Figure 8-15. A6 Component Locator

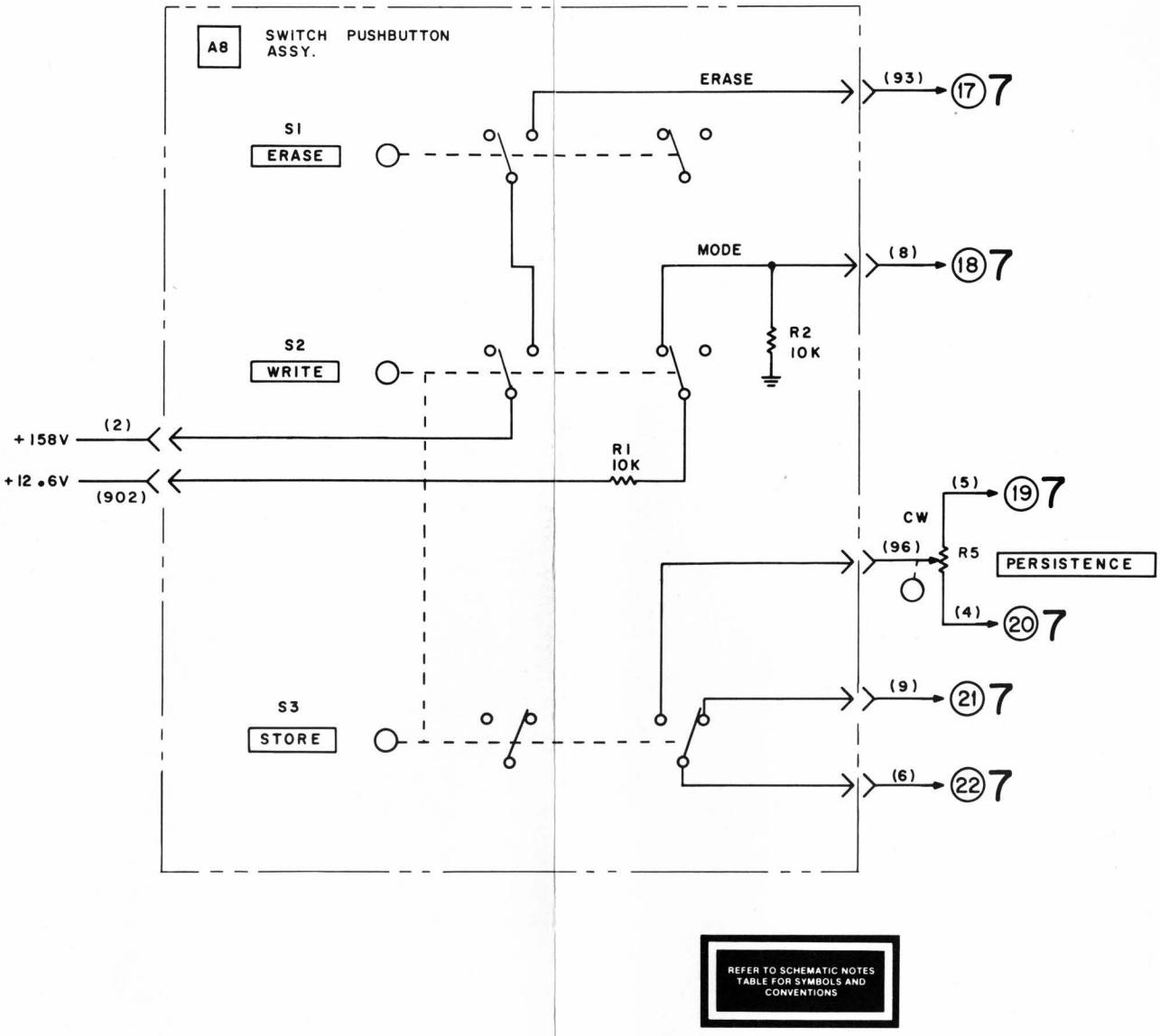

REFER TO SCHEMATIC NOTES TABLE FOR SYMBOLS AND CONVENTIONS

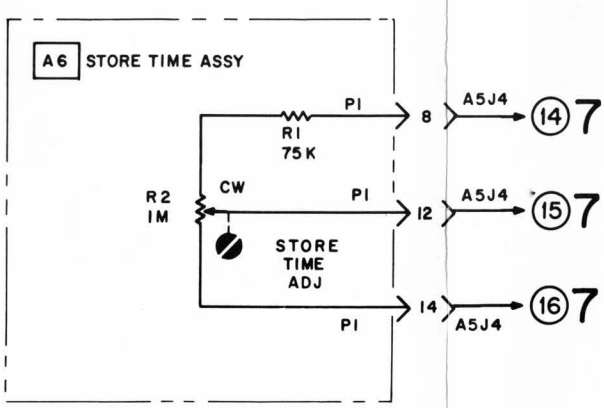

6

REFERENCE DESIGNATIONS

CHASSIS	A6	A8
R5	R1,2	R1,2 S1-3

1331A CONTROL CIR.
1331A-C-1

Figure 8-17.
Schematic, Control Circuits

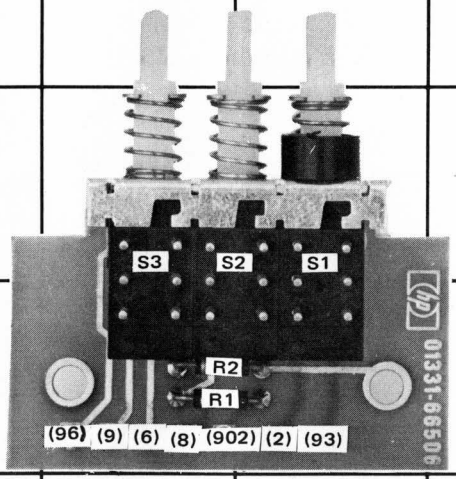

A8

Circuit boards have plated through component holes. This permits soldering from either side of the board.

REF DESIG	GRID LOC
R1	C-4
R2	C-4
S1	D-3
S2	C-3
S3	C-3

1331A/C-A-5

Figure 8-16. A8 Component Locator

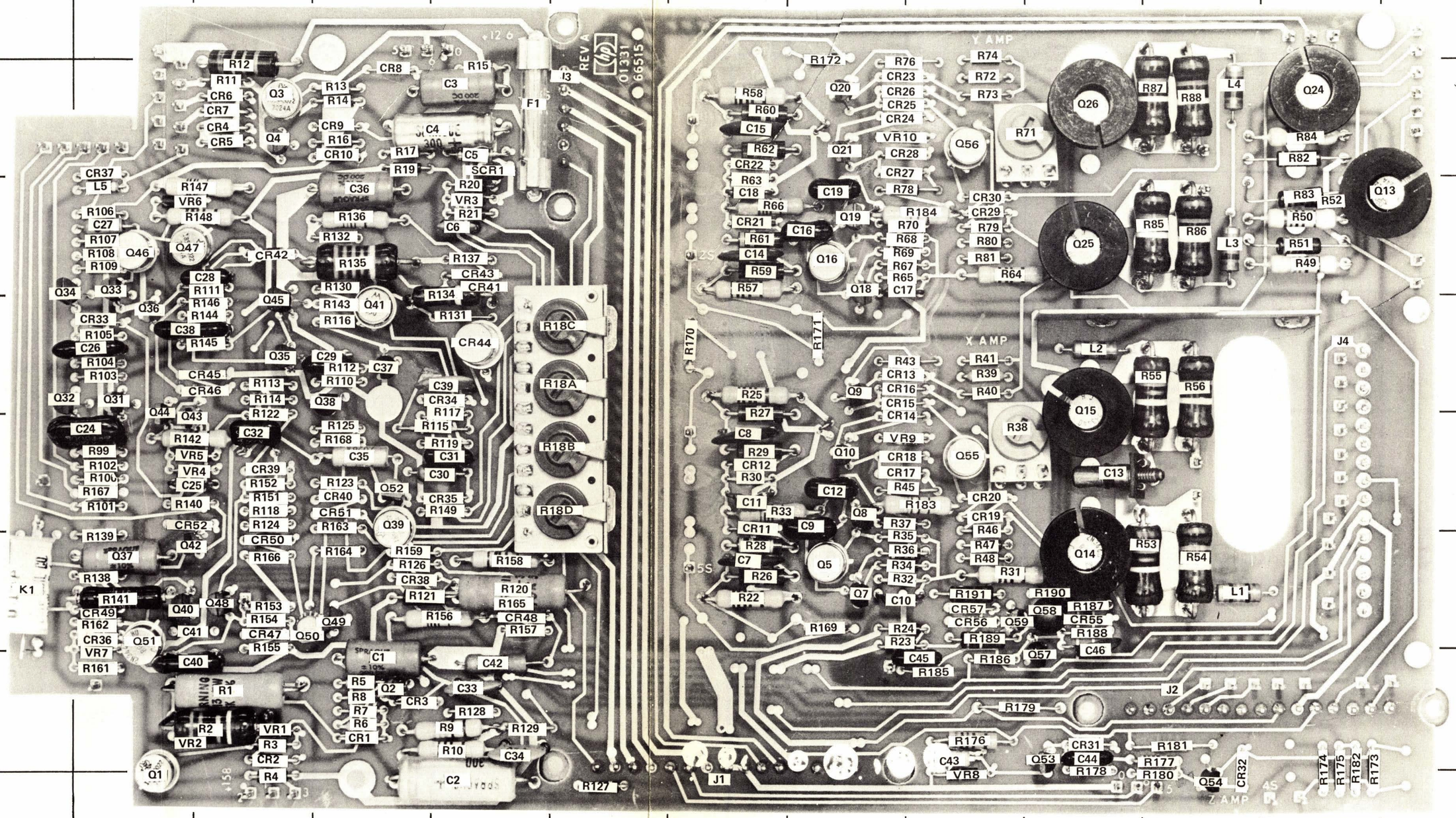

Circuit boards have plated through component holes. This permits soldering from either side of the board.

A5

Figure 8-18. A5 Component Locator

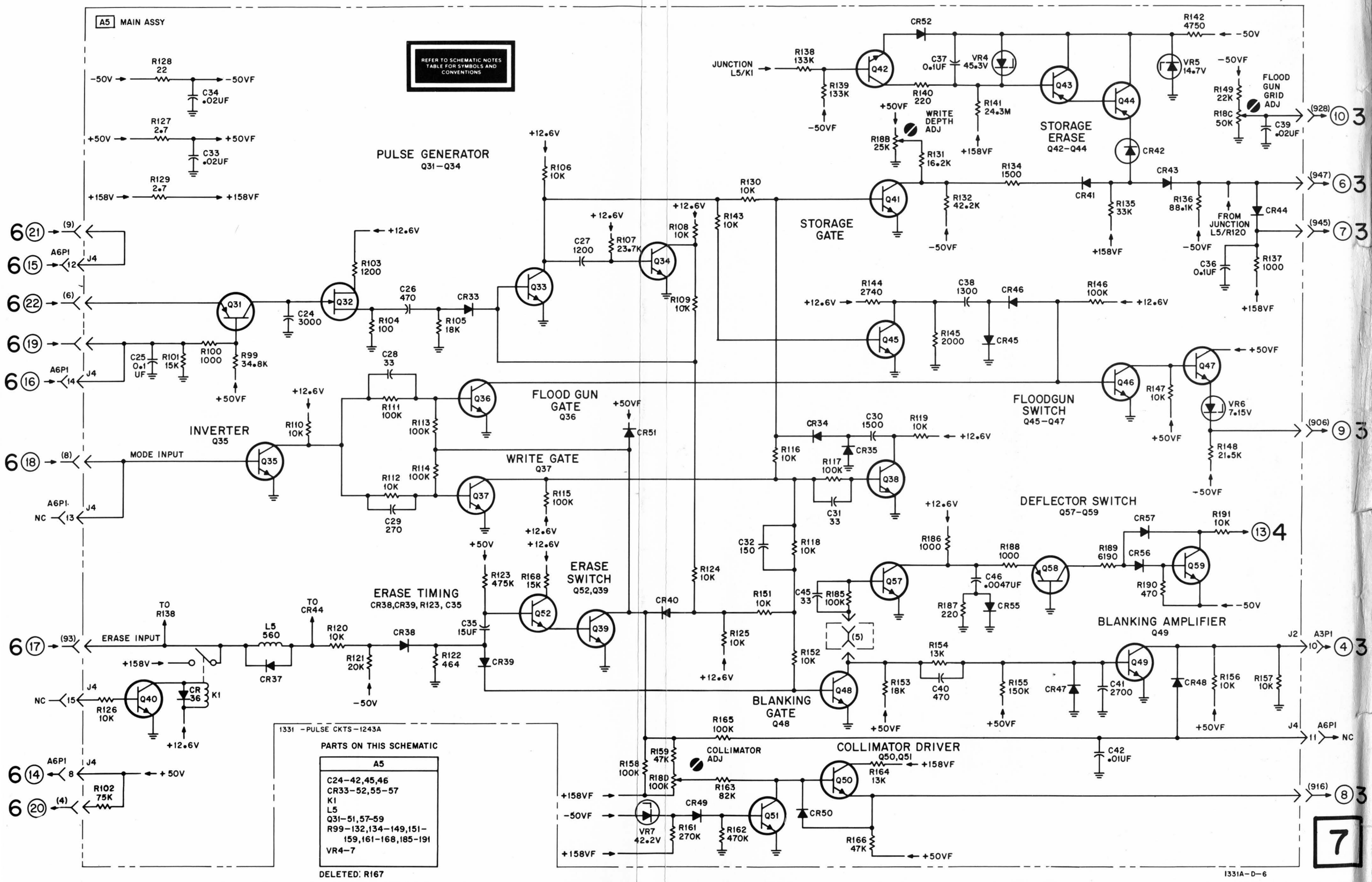

Figure 8-19.
Schematic, Pulse Circuits
8-17/8-18

REF DESIG	GRID LOC	REF DESIG	GRID LOC	REF DESIG	GRID LOC	REF DESIG	GRID LOC	REF DESIG	GRID LOC	REF DESIG	GRID LOC
C1	D-7	CR15	H-4	Q7	H-6	R14	D-2	R73	I-2	R143	D-4
C2	E-8	CR16	H-4	Q8	H-5	R15	E-2	R74	I-1	R144	C-4
C3	E-2	CR17	H-5	Q9	H-4	R16	D-2	R76	I-1	R145	C-4
C4	E-2	CR18	H-5	Q10	H-5	R17	D-2	R78	H-3	R146	C-4
C5	E-3	CR19	I-5	Q13	M-3	R18	F-2	R79	I-3	R147	C-3
C6	E-3	CR20	I-6	Q14	J-6	R19	D-2	R80	I-3	R148	C-3
C7	G-6	CR21	G-3	Q15	J-4	R20	E-3	R81	I-3	R149	E-5
C8	G-5	CR22	G-2	Q16	H-3	R21	E-3	R82	L-2	R151	C-5
C9	H-5	CR23	H-2	Q18	H-3	R22	G-6	R83	L-3	R152	C-5
C10	H-6	CR24	H-2	Q19	H-3	R23	H-6	R84	L-2	R153	C-6
C11	G-5	CR25	H-2	Q20	H-2	R24	H-6	R85	K-3	R154	C-6
C12	H-5	CR26	H-2	Q21	H-2	R25	G-4	R86	K-3	R155	C-6
C13	J-5	CR27	H-2	Q24	L-2	R26	G-6	R87	K-2	R156	E-6
C14	G-3	CR28	H-2	Q25	J-3	R27	G-5	R88	K-2	R157	E-6
C15	G-2	CR29	I-3	Q26	J-2	R28	G-6	R99	B-5	R158	E-6
C16	H-3	CR30	I-3	Q31	B-4	R29	G-5	R100	B-5	R159	D-6
C17	H-3	CR31	J-7	Q32	A-4	R30	G-5	R101	B-5	R161	B-7
C18	G-3	CR32	K-8	Q33	B-3	R31	I-6	R102	B-5	R162	B-6
C19	H-2	CR33	B-4	Q34	A-3	R32	H-6	R103	B-4	R163	D-5
C24	B-5	CR34	E-4	Q35	C-4	R33	G-5	R104	B-4	R164	D-6
C25	B-5	CR35	E-5	Q36	B-4	R34	H-6	R105	B-4	R165	E-6
C26	B-4	CR36	B-6	Q37	B-6	R35	H-6	R106	B-3	R166	C-6
C27	B-3	CR37	B-2	Q38	D-4	R36	H-6	R107	B-3	R167	B-5
C28	C-3	CR38	D-6	Q39	D-5	R37	H-5	R108	B-3	R168	D-5
C29	D-4	CR39	C-5	Q40	B-6	R38	I-5	R109	B-3	R169	H-6
C30	E-5	CR40	D-5	Q41	D-4	R39	I-4	R110	D-4	R170	G-4
C31	E-5	CR41	E-3	Q42	B-6	R40	I-4	R111	C-3	R171	H-4
C32	C-5	CR42	C-3	Q43	B-5	R41	I-4	R112	D-4	R172	H-1
C33	E-7	CR43	E-3	Q44	B-3	R43	H-4	R113	C-4	R173	L-1
C34	E-7	CR44	E-4	Q45	C-4	R45	I-5	R114	C-4	R174	L-1
C35	D-5	CR45	C-4	Q46	B-3	R46	I-6	R115	E-5	R175	L-7
C36	D-3	CR46	C-6	Q47	B-3	R47	I-6	R116	D-4	R176	I-7
C37	D-4	CR47	C-6	Q48	C-6	R48	I-6	R117	E-4	R177	K-7
C38	B-4	CR48	E-6	Q49	D-6	R49	L-3	R118	C-5	R178	J-7
C39	E-4	CR49	B-6	Q50	C-6	R50	L-3	R119	E-5	R179	I-7
C40	B-7	CR50	C-6	Q51	B-6	R51	L-3	R120	E-6	R180	K-7
C41	C-6	CR51	D-5	Q52	D-5	R52	L-3	R121	D-6	R181	K-7
C42	E-7	CR52	C-5	Q53	J-7	R53	K-6	R122	C-4	R182	L-7
C43	I-7	CR55	J-6	Q54	K-8	R54	K-6	R123	D-5	R183	I-5
C44	J-7	CR56	I-6	Q55	I-5	R55	K-4	R124	C-5	R184	I-3
C45	J-7	CR57	I-6	Q56	I-2	R56	K-4	R125	D-5	R185	I-7
C46	J-6	F1	E-2	Q57	J-7	R57	G-3	R126	D-6	R186	I-7
CR1	D-7	J1	G-8	Q58	J-6	R58	G-2	R127	F-8	R187	J-6
CR2	C-7	J2	K-6	Q59	I-6	R59	G-3	R128	E-7	R188	J-6
CR3	D-7	J3	F-2	R1	C-7	R60	G-2	R129	E-7	R189	I-6
CR4	C-2	J4	L-4	R2	C-7	R61	G-2	R130	D-3	R190	J-6
CR5	C-2	K1	A-6	R3	C-7	R62	G-2	R131	E-4	R191	I-6
CR6	C-2	L1	K-6	R4	C-8	R63	G-3	R132	D-3	SCR1	E-2
CR7	C-2	L2	J-4	R5	D-7	R64	I-3	R134	E-3	VR1	C-7
CR8	D-2	L3	K-3	R6	D-7	R65	H-3	R135	D-3	VR2	B-7
CR9	D-2	L4	K-2	R7	D-7	R66	G-3	R136	D-3	VR3	E-3
CR10	D-2	L5	B-3	R8	D-7	R67	H-3	R137	E-3	VR4	B-5
CR11	G-5	Q1	B-8	R9	E-7	R68	H-3	R138	B-6	VR5	B-5
CR12	G-5	Q2	D-7	R10	E-7	R69	H-3	R139	B-6	VR6	C-3
CR13	H-4	Q3	C-2	R11	C-2	R70	H-3	R140	B-5	VR7	B-6
CR14	H-4	Q4	C-2	R12	C-2	R71	I-2	R141	B-6	VR8	I-6
CR15	H-4	Q5	H-6	R13	D-2	R72	I-2	R142	B-5	VR9	H-5
										VR10	H-2

1331A/C-R-14

Figure 8-18. A5 Component Locator (Cont'd)

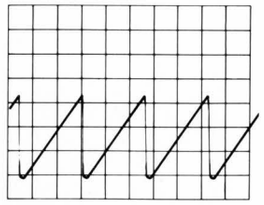

1 20 USEC/DIV
2V/DIV

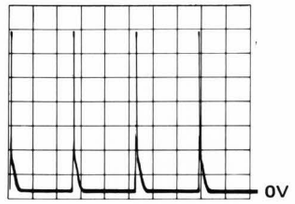

2 20 USEC/DIV
0.5V/DIV

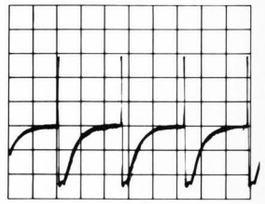

3 20 USEC/DIV
0.5V/DIV

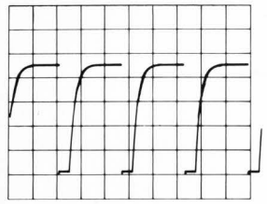

4 20 USEC/DIV
1V/DIV

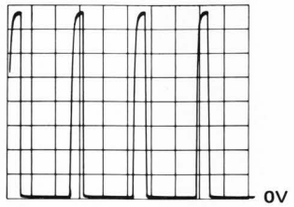

5 20 USEC/DIV
1V/DIV

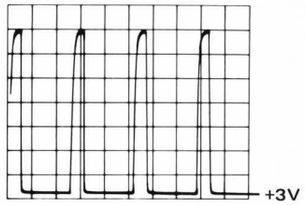

6 20 USEC/DIV
1V/DIV

TEST CONDITIONS

Mode	WRITE
INTENSITY	ccw
PERSISTENCE	ccw
POSITION (HORIZ and VERT)	centered
INPUT (X,Y, and Z)	shorted

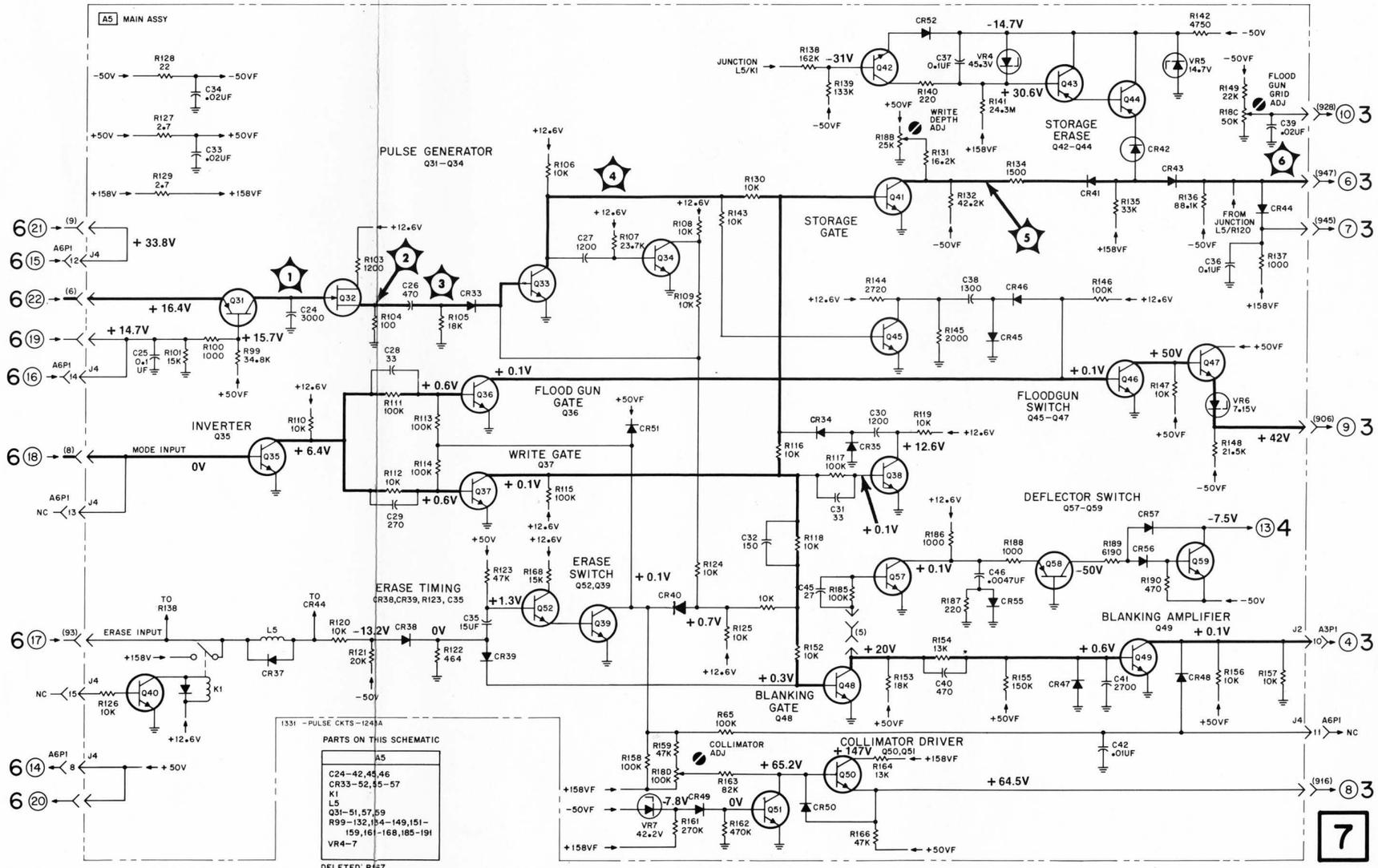

1331IA-B-2

Figure 8-20.
Write Mode Troubleshooting Guide

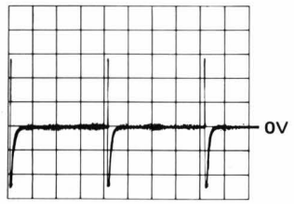

3 50 USEC/DIV
0.5V/DIV

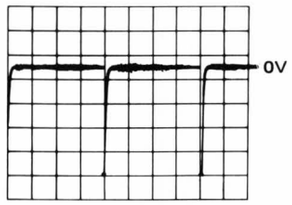

4 50 USEC/DIV
1V/DIV

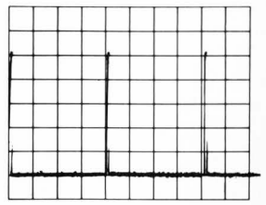

5 50 USEC/DIV
1V/DIV

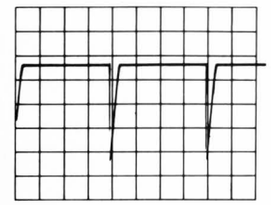

6 50 USEC/DIV
1V/DIV

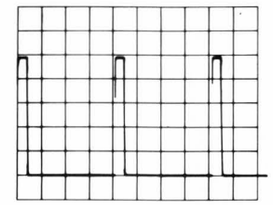

7 50 USEC/DIV
10V/DIV

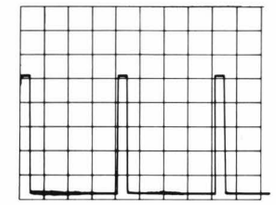

8 50 USEC/DIV
10V/DIV

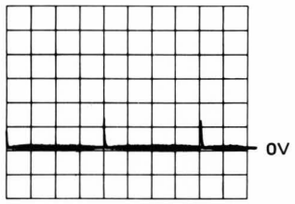

2 50 USEC/DIV
1V/DIV

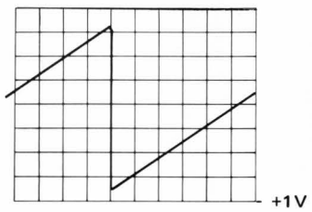

1 20 USEC/DIV
1V/DIV

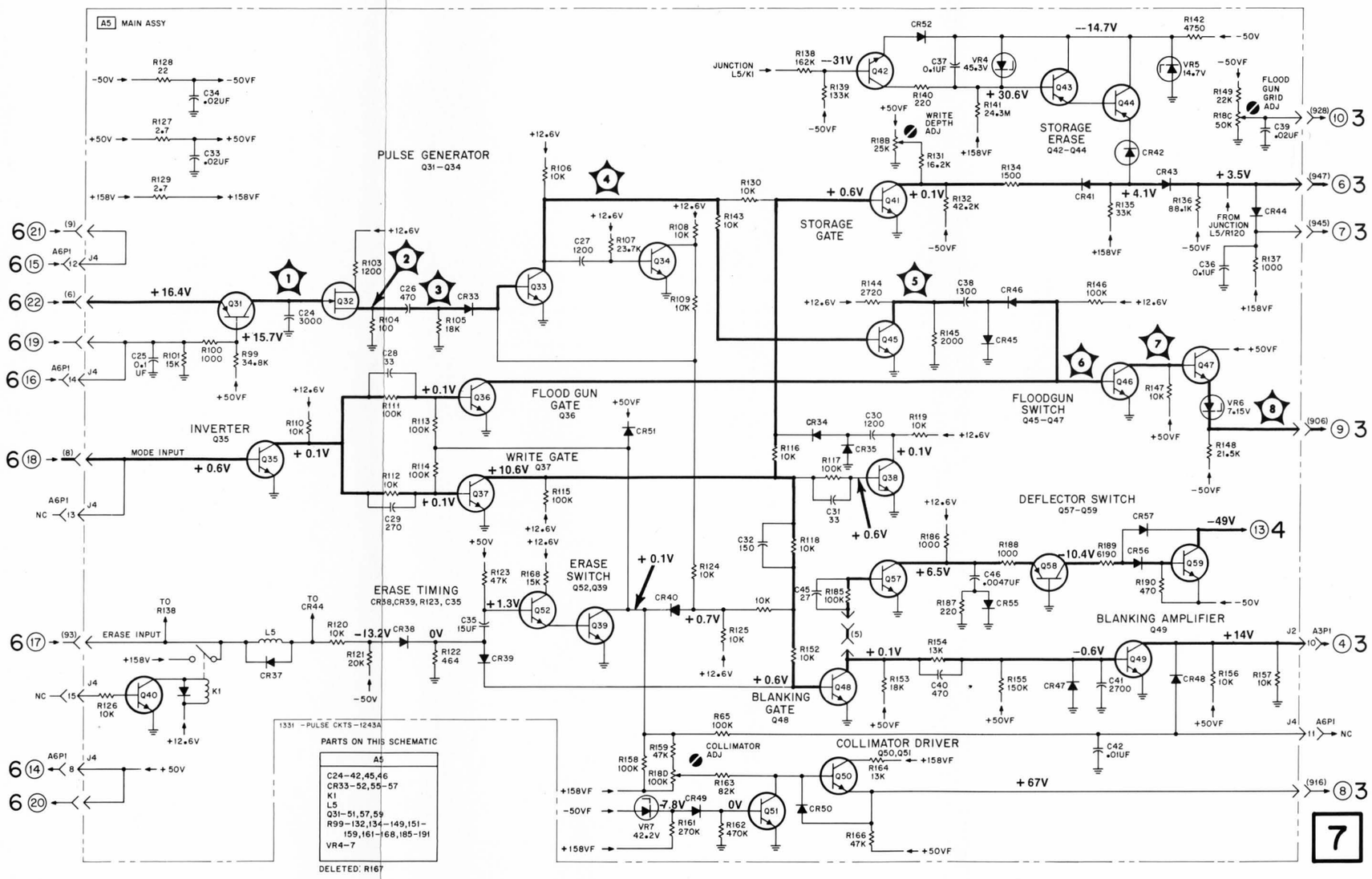

TEST CONDITIONS

Mode	STORE
INTENSITY	ccw
PERSISTENCE	ccw
POSITION (HORIZ and VERT)	centered
INPUT (X, Y, and Z)	shorted

Figure 8-21.
Store Mode Troubleshooting Guide

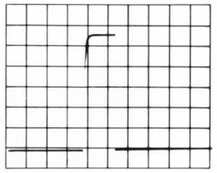

1 0.1 SEC/DIV
1V/DIV

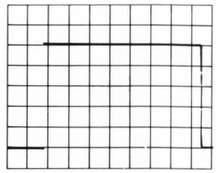

2 0.1 SEC/DIV
10V/DIV

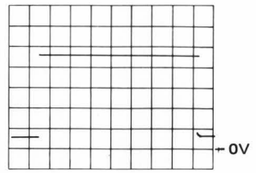

3 0.1 SEC/DIV
1V/DIV

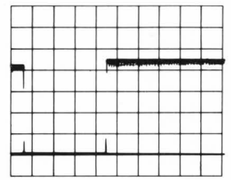

4 0.2 SEC/DIV
1V/DIV

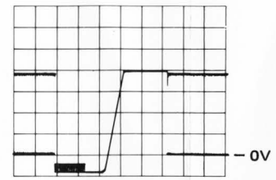

5 0.2 SEC/DIV
2V/DIV

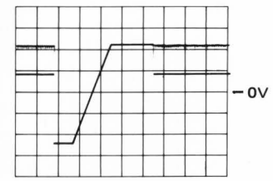

6 0.2 SEC/DIV
5V/DIV

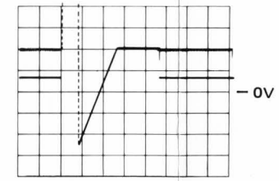

7 0.2 SEC/DIV
5V/DIV

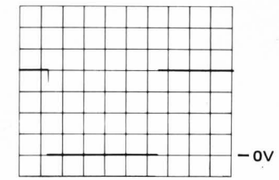

8 0.2 SEC/DIV
5V/DIV

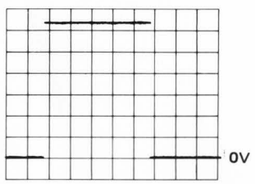

9 0.2 SEC/DIV
1V/DIV

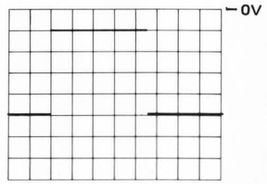

10 0.2 SEC/DIV
10V/DIV

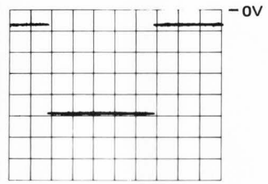

11 0.2 SEC/DIV
10V/DIV

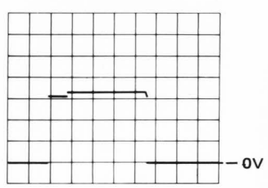

12 0.2 SEC/DIV
5V/DIV

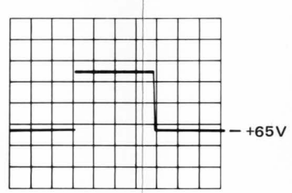

13 0.2 SEC/DIV
10V/DIV

TEST CONDITIONS

1. Set Model 1331A:

WRITE	in
INTENSITY	ccw
PERSISTENCE	ccw
POSITION (HORIZ and VERT)	centered
INPUT (X,Y, and Z)	shorted

2. Set monitor oscilloscope as indicated under each waveform.

3. Press and quickly release ERASE.

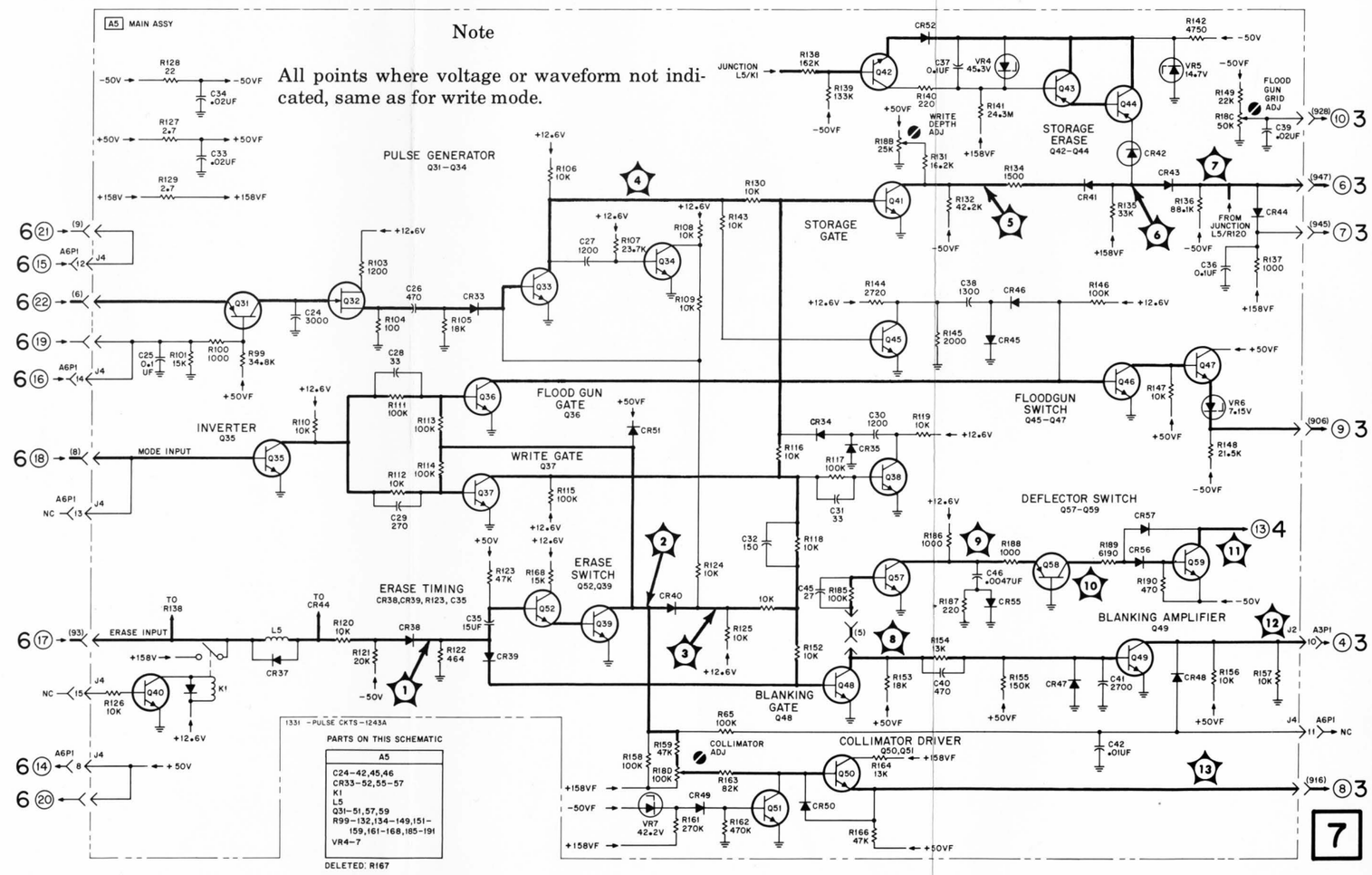

Figure 8-22.
Erase Function Troubleshooting Guide

MODEL 1331A/OPTION H72

X-Y DISPLAY

Model 1331A/Option H72 is a standard HP Model 1331A X-Y Display modified to conform to Picker-Nuclear Specification A010811 and Specification A011058.

SPECIFICATION CHANGE.

Vertical and Horizontal Amplifiers

Deflection Factor:
Vertical: 2.64 V for 8 division deflection.
Horizontal: 3.3 V for 10 division deflection.

Z-Axis Amplifier

Offset: -1 V; Z-axis INPUT open (or at 0 V) gives beam at low intensity or blanked with INTENSITY full cw. Full ccw rotation of INTENSITY turns beam off. With +1 V at Z INPUT, INTENSITY control varies beam from cut-off to full intensity. A -1 V signal at Z INPUT turns off beam current regardless of INTENSITY control setting.

Deflection Blanking: >10 divisions of deflection from undeflected position; circuit recovery time <2 μsec to within one spot diameter.

Cathode-Ray Tube

Storage Parameters:
Remote Erase: Initiated by applying logic level 1 (high TTL level) to erase line.

Remote Minimum Persistence: Initiated by grounding remote persistence line in WRITE mode.

MODIFICATIONS.

X-Axis and Y-Axis Deflection Factor Change: Refer to Section III in the standard instrument manual. Paragraph 3-26, figure 3-4, and Table 3-1 explain the method whereby input attenuation is changed to provide desired deflection factors. Because Table 3-1 does not specify the changes required, Table 1 in this manual supplement lists the components used on assembly A1 to achieve a 0.33 V/div deflection factor.

7000-A-13

HEWLETT-PACKARD COMPANY 1900 GARDEN OF THE GODS ROAD, COLORADO SPRINGS, COLORADO, U. S. A.

Z-Axis Offset: To achieve the desired -1 V Z-axis offset, only one component is changed on the Z-Amplifier/HV board. This change is indicated in Table 1.

Deflection Blanking, Remote Erase, Remote Minimum Persistence: A special Program Board A4 is designed for this instrument. Circuitry for each of the above functions is contained on this board and is shown in figure 1. Figure 2 is a component locator for this board.

CAUTION

A high-intensity spot or continuously repetitive trace will burn the CRT storage mesh. Keep INTENSITY at the lowest level compatible with ambient light conditions.

Rear Panel Connector: A special 4-pin connector (J4) is mounted on the rear panel assembly. Signals for Deflection Blanking, Remote Erase, and Remote Minimum Persistence functions are applied to this connector in the following manner.

J4 Connector Pin Functions

Pin	Function
1	Erase
2	Ground
3	Minimum Persistence
4	Deflection Blanking

TEST PROCEDURE.

The operating and service manual for the standard instrument (Section V) may be used to check performance and make necessary adjustments to this special instrument except for X-Axis and Y-Axis deflection factors, and Z-Axis intensity limit and gain adjustments. Follow the procedures outlined below to make X, Y, and Z-Axis adjustments.

NOTE

Before attempting to adjust the instrument under test, ground deflection blanking program connection, J4, pin 4, and apply +2 V dc to Z INPUT.

X-Axis and Y-Axis Attenuator Adjustment.

a. Apply 2.5 V p-p, 10 kHz square-wave to X-Axis INPUT.
b. Adjust A1C44 to eliminate tails on dots.
c. Adjust X-Axis Gain adjustment to give 7.57 divisions horizontal deflection.
d. Remove square-wave from X-Axis and apply to Y-Axis INPUT.
e. Repeat steps b and c, adjusting A1C45 and Y Gain adjust.
f. Remove square-wave from Y INPUT.

Z-Axis Adjustments.

a. Adjust Intensity Limit as in manual.
b. Disable high voltage oscillator, monitor gate output voltage.
c. Note that INTENSITY controls gate output over its full range (+1 V to +43 V).
d. Disconnect +2 V dc from Z INPUT.
e. Note that INTENSITY control cannot raise gate output above +5 V.
f. Reapply +2 V to Z INPUT, enable high voltage oscillator.

Tests for Program Functions. (Instrument is operational.)

1. Deflection Blanking.

   a. Ground J4, pin 4. Note that spot can be positioned by front panel controls.
   b. Apply signal > +2 V dc < +5 V dc to pin 4.
   c. Check that front panel controls cannot move trace back on screen.
   d. Apply square-wave of 0 V to + 2 V, 1 kHz to J4, pin 4.
   e. Increase output of square-wave generator slowly to 250 kHz.
   f. Observe that spot moves less than one spot diameter at frequencies up to 250 kHz. (A tail will be seen on the spot as trace is deflected, but the spot itself does not appear to move.)
   g. Remove input to J4, pin 4.

2. Remote Erase.

   a. Apply > +2 V < +5 V to J4, pin 1.
   b. Note that CRT of instrument under test is erased.
   c. Remove input to J4, pin 1.

3. Remote Minimum Persistence.

   a. Put instrument in WRITE mode.
   b. Ground pin 3 of J4 remote connector.
   c. Note that instrument goes to minimum persistence operation.

GENERAL.

Table 1 lists replaceable parts deleted, changed, or added to make these modifications. Make appropriate changes to Table 6-2 in the standard instrument manual.

Figure 2 is a schematic of the circuits added to Program board A4, and figure 1 is a component locator for the board.

Amended to include information in this manual supplement, the operating and service manual for the standard instrument will apply to this special instrument.

Encl:
1331A Manual

sbm/12-74

HEWLETT hp PACKARD

Table 1. Replaceable Parts

Action	Ref. Desig.	HP Part No.	TQ	Description
				Chassis Mounted Parts
Delete	MP10	5060-0728	2	Foot, half-module
Change	A1	01331-66530 to 01331-93130*	1	A: Main board assembly
Change	A2	01331-66533 to 01331-93135*	1	A: Z Amplifier/HV board assembly
Change	A4	01331-66534 to 01331-93127*	1	A: Program board assembly
Change	MP9	01331-00216 to 01331-93129*	1	Panel assembly, rear
Change	MP14	01331-02201 to 01331-93027*	3	Bezel, CRT
Change	V1	5083-2591 to 5083-2593	1	CRT, selected
Add	J4	*	1	J: Connector, 4-pin, Switchcraft #2504 FP
Add	W10	01331-93133*	1	W: Coaxial, red
Add	W11	01331-93134*	1	W: Coaxial, Yellow

* Order direct from HP Colorado Springs Division specifying use in Model 1331A/Option H72

7000-A-13

HEWLETT hp PACKARD

Table 1. Replaceable Parts

Action	Ref. Desig.	HP Part No.	TQ	Description
				Assemblies with Mounted Parts
				(Modify parts list for standard A1 board as shown)
Add	A1C43	0121-0060	2	C: Var Cer 2 - 8 pF
Add	A1C44	0121-0060		C: Var Cer 2 - 8 pF
Change	A1R3 to	0757-0044		R: fxd metflm 33.1 k ohms 1% 1/2W
Change	A1R33 to	0757-0044		R: fxd metflm 33.1 k ohms 1% 1/2W
Add	A1R200	0757-0855	2	R: fxd metflm 68.1 k ohms 1% 1/2W
Add	A1R201	0757-0855		R: fxd metflm 68.1 k ohms 1% 1/2W
				(Modify parts list for standard A2 board as shown)
Change	A2R15 to	0757-0460		R: fxd metflm 61.9 k ohms 1% 1/8W
				(Modify parts list for standard A4 board as shown)
Add	A4C8	0160-3443	1	C: fxd cer 0.1 μF 200 wVdc
Add	A4CR4 thru A4CR7	1901-0040	4	CR: Si 30 V max., VRM, 50 mA
Add	A4Q8	1854-0071	1	Q: Si npn, PD-300 mW, FT-200 MHz
Add	A4R37 thru A4R39	0757-0283	3	R: fxd metflm 2000 ohms, 1% 1/8W
Add	A4S1	0490-0932		S: Relay, reed, 0.25 A 28 V cont., 12 V coil.

7000-A-13

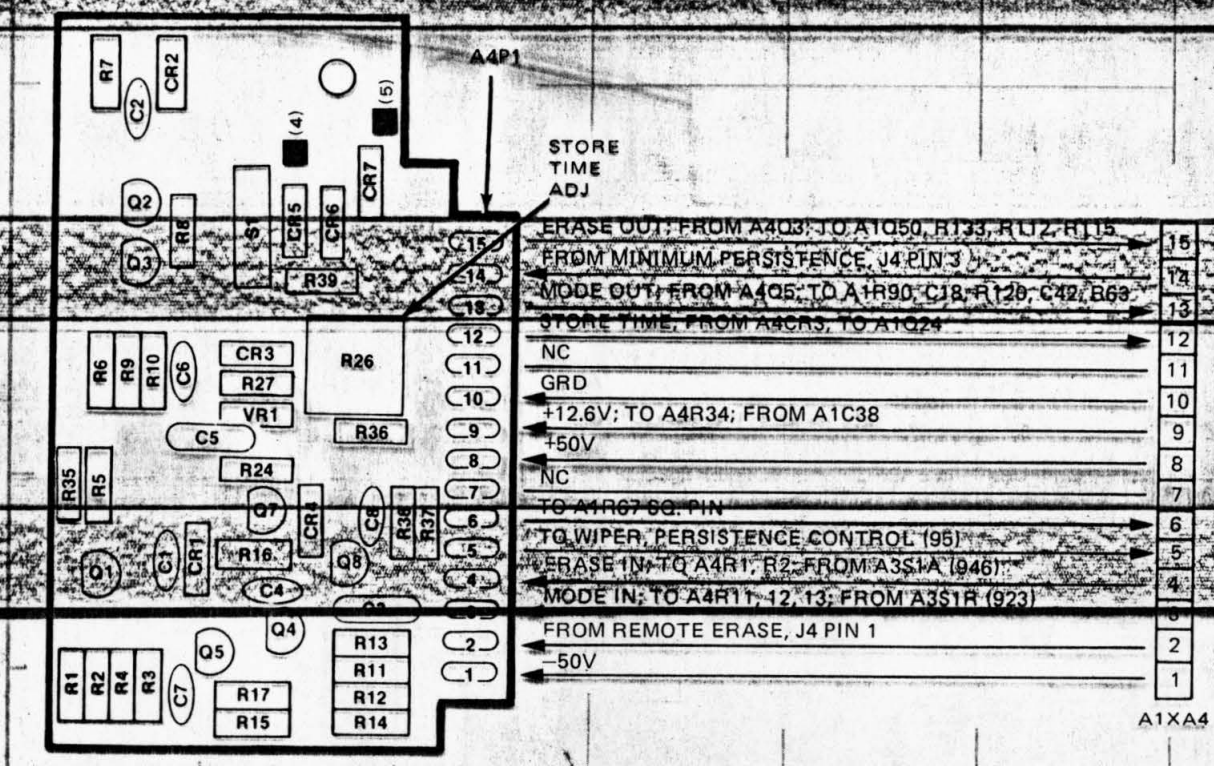

REF DESIG	GRID LOC	REF DESIG	GRID LOC	REF DESIG	GRID LOC
C1	A-4	Q3	A-2	R12	B-5
C2	A-2	Q4	B-4	R13	B-4
C3	B-4	Q5	B-4	R14	B-5
C4	B-4	Q7	B-4	R15	B-5
C5	B-3	Q8	B-4	R16	B-4
C6	B-6	R1	A-5	R17	B-5
C7	A-5	R2	A-5	R24	B-3
C8	B-4	R3	A-5	R26	B-3
CR1	A-4	R4	A-5	R27	B-3
CR2	A-1	R5	A-4	R35	A-3
CR3	B-3	R6	A-3	R36	B-3
CR4	B-4	R7	A-1	R37	C-4
CR5	B-2	R8	A-2	R38	B-4
CR6	B-2	R9	A-3	R39	B-2
CR7	B-2	R10	A-3	S1	B-2
Q1	A-4	R11	B-4	VR1	B-3
Q2	A-2				

Figure 1

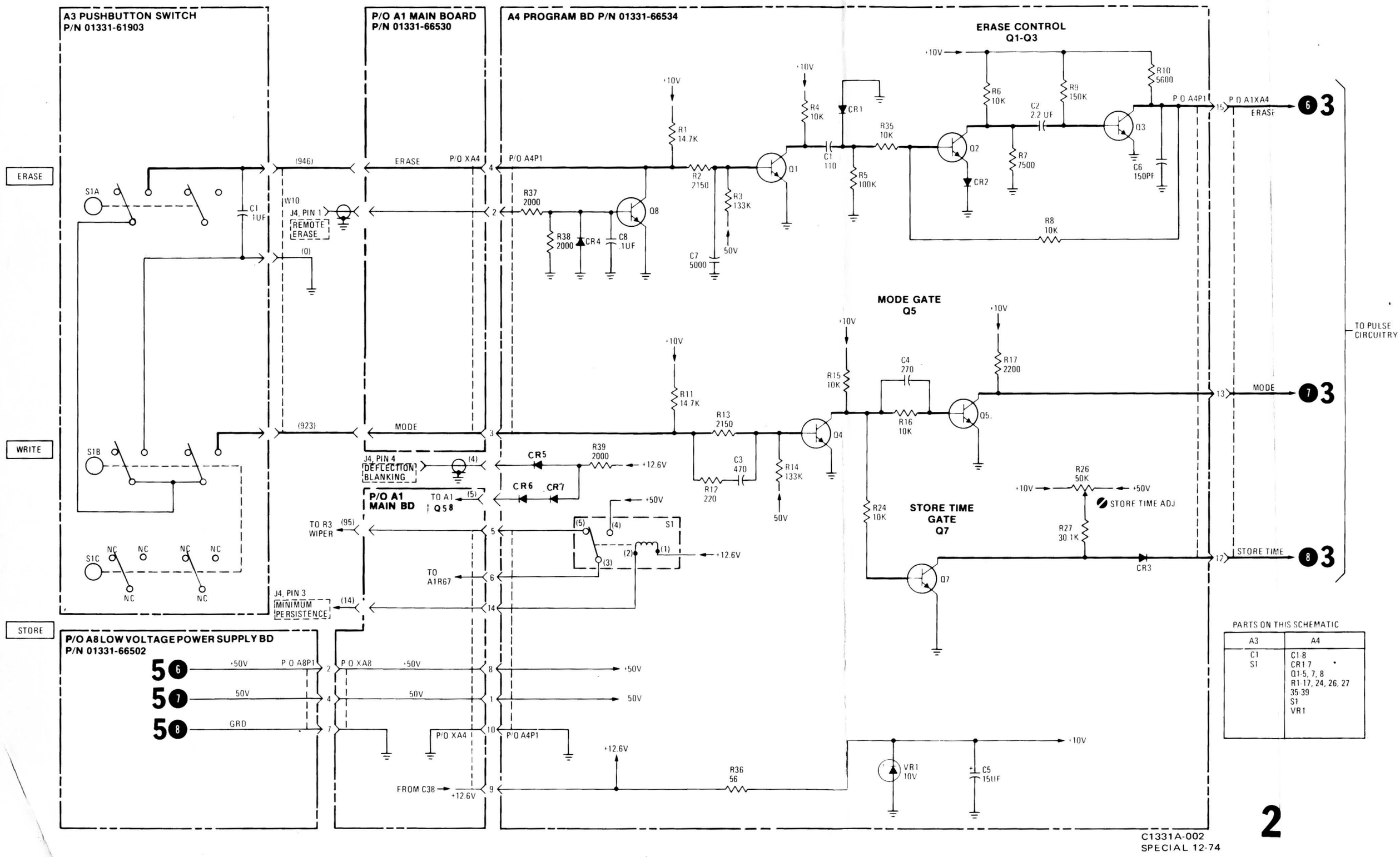

PARTS ON THIS SCHEMATIC

A3	A4
C1 S1	C1-8 CR1-7 Q1-5, 7, 8 R1-17, 24, 26, 27 35-39 S1 VR1

Figure 2

HEWLETT hp PACKARD

01331-90903

PRINTED IN U.S.A.