HEWLETT-PACKARD JOURNAL

TECHNICAL INFORMATION FROM THE -hp- LABORATORIES

CORPORATE OFFICES • 1501 PAGE MILL ROAD • PALO ALTO, CALIFORNIA 94304 • VOL. 16 NO. 6, FEBRUARY 1965

New Coaxial Couplers for Reflectometers, Detection, and Monitoring

Coaxial couplers with flattened response and high directivity facilitate swept-type measurements of several kinds.

ACCURATE reflectometer measurements in coaxial systems were made practical by the development of suitable directional couplers at Hewlett-Packard ten years ago.[1] Not only were these couplers useful in reflectometer applications because of their octave frequency response and high directivity, but their accurate coupling and low SWR made them attractive for other applications as well, such as for accurate attenuation or as take-offs for frequency and power monitoring.

Three new series of coaxial couplers, all with better directivity and flatter frequency response, have now been developed at -hp- to meet the needs of a variety of applications, including reflectometers, power and frequency monitoring, and detection. One type is a high-directivity coupler with a frequency response that is constant within ±0.3 db over an octave band of frequencies. The second type, more appropriately known as a directional detector, is a combination

[1] J. K. Hunton, H. C. Poulter, C. S. Reis, "High Directivity Coaxial Couplers and Reflectometers," **Hewlett-Packard Journal**, Vol. 7, No. 2, Oct., 1955.

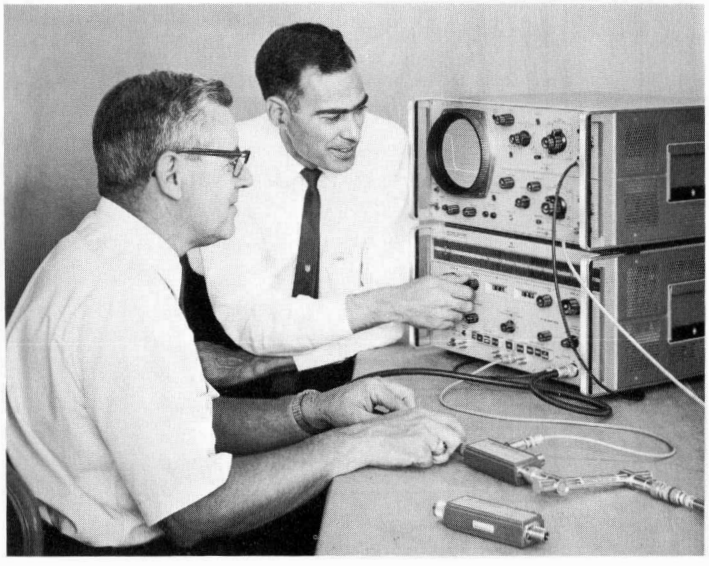

Fig. 1. *Flat frequency response of new -hp- Directional Couplers and Detectors is especially advantageous in closed-loop power-leveling systems, such as in the swept-frequency evaluation of coaxial filter frequency response being made here by -hp- design engineers Larry Renihan (left) and Auber Ryals. Directional Detector, which supplies error signal for automatic leveling loop, senses RF power right at point of measurement.*

SEE ALSO:

Waveguide detectors with flat response, p. 6.

New time unit for WWVB, p. 8.

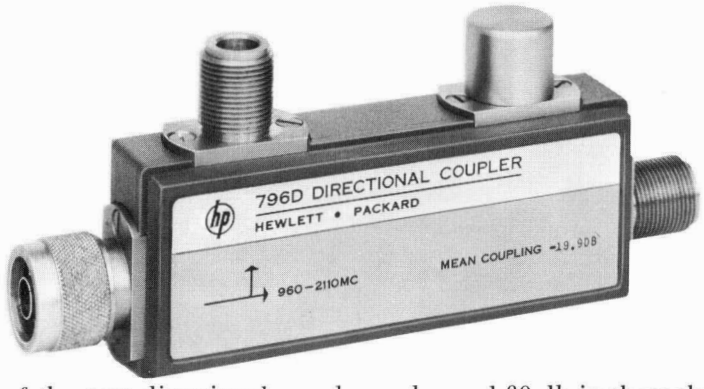

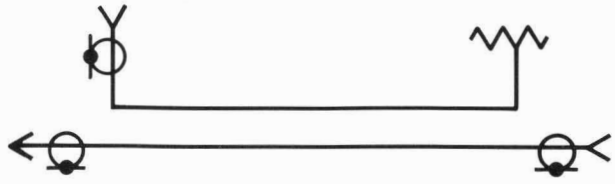

Fig. 2. *Coaxial Directional Coupler –hp– Model 796D, shown at left and in schematic form above, has high directivity, insertion loss of only about ¼ db, and SWR of 1.15 throughout range of 960 to 2110 Mc. Model 797D is for frequency range of 1900 to 4100 Mc and 798C is for 3.7 to 8.3 Gc.*

of the new directional coupler and a diode detector element that is mounted directly on the coupler arm, as shown in Fig. 7. The combination of detector and coupler in one package improves accuracy in closed-loop power leveling set-ups by eliminating the ambiguities that exist when a connector intervenes between detector and coupler.

The third new coupler is a dual directional-coupler, combining two directional couplers back-to-back in a single package for reflectometer applications. This arrangement is one that also eliminates some connector mismatches by combining the couplers in one package. In addition, the dual directional couplers have high directivity,* 40 db in those units which cover the 215 to 1900 Mc portion of the spectrum and 30 db in those that are for 1900 to 4000 Mc. The high directivity reduces SWR errors to very low levels in reflectometer measurements.

DIRECTIONAL COUPLER

The new directional couplers (Fig. 2) are useful for monitoring microwave power, particularly in power-leveling applications where it may be desired to use either a thermistor or barretter connected to the auxiliary arm.

When monitoring power in swept-frequency applications, the most significant source of errors is usually the frequency response of the coupler. Although the finite directivity of the coupler may contribute other errors, these assume negligible proportions for moderate standing-wave ratios if the directivity of the coupler is high.

Errors are thus reduced by the very flat frequency response of the new –hp– Directional Couplers. The coupler design holds frequency response variations to less than ±0.3 db over more than an octave band by division of the coupling arm into two coupling elements in series. The elements have different coupling values so that the power coupling curve has the form:

$$k_1 \sin^2 (\beta l) + k_2 \sin^2 (2\beta l),$$

where βl pertains to the electrical length of the elements. By manipulation of k_1 and k_2, related to the coupling of the individual elements, the coupling curve has been shaped into an equal ripple function in the desired band, as shown in Fig. 3. This curve, incidentally, represents the *output* coupling (ratio of output power to power in the auxiliary arm) rather than the more commonly specified coupling factor (ratio of input power to power in the auxiliary arm). Output coupling relates the power sensed at the auxiliary output directly to the actual power delivered to the system, as defined in Fig. 4.

The new directional couplers are especially useful as take-offs for power or frequency monitoring in RF systems. They can tolerate input powers up to 50 w CW. Fig. 5 shows one application in which the coupler serves a double purpose as a power monitor take-off and as a 20-db attenuator for sensitivity meas-

* Defined as the ratio of power in the auxiliary arm, with input power applied in the forward direction, to the power in the auxiliary arm when the same input power is applied in the reverse direction (see Fig. 4).

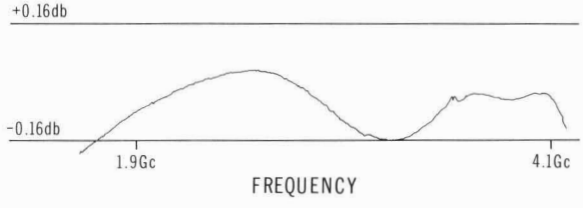

Fig. 3. *Output coupling (ratio of forward power out of main and auxiliary arms) of 797D Directional Coupler is within ±0.2 db of mean coupling across octave band of frequencies.*

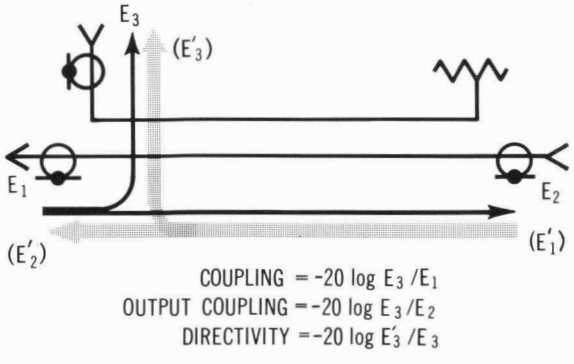

Fig. 4. *Definitions of coupling, output coupling, and directivity. E_1 is input voltage, E_2 is voltage out of main arm, and E_3 is voltage out of auxiliary arm. E'_2 and E'_3 are voltages out of input and auxiliary arms respectively with voltage E_1 applied in reverse direction to main arm output. In all specifications, matched loads are considered to be connected to outputs.*

urements. The couplers can function either with crystal detectors or with power measuring equipment, such as the –*hp*– Model 478A Coaxial Thermistor Mount and Model 431B Power Meter.

DIRECTIONAL DETECTOR

The new Directional Detectors are directional couplers with diode detectors installed directly on the coupler arms (Fig. 7). Not only does this arrangement remove the ambiguities that arise when there is a connector between coupler and detector, but it also allows the two elements to be tested and specified as a unit.

The detector element in the Directional Detectors is the same semiconductor diode assembly developed for the exceptionally flat –*hp*– Model 423A Crystal Detectors.[2, 3] As shown in Fig. 6, the combination of coupler and broadband detector in one unit achieves very good frequency response.

Three of the Directional Detectors use the same coaxial configuration as the new Directional Couplers. The X-band Directional Detectors, however, are hybrid devices that use a double-stacked compensated waveguide coupler to obtain flat coupler response throughout X-band (Fig. 12). One of the X-band detectors is for use in coaxial systems and has transition sections that match the waveguide sections to coaxial connectors at both ends. The other one has a coaxial input but uses a waveguide cover flange for the output connector. This configuration is useful when a monitor is required for a waveguide system driven by a signal source with coaxial output.

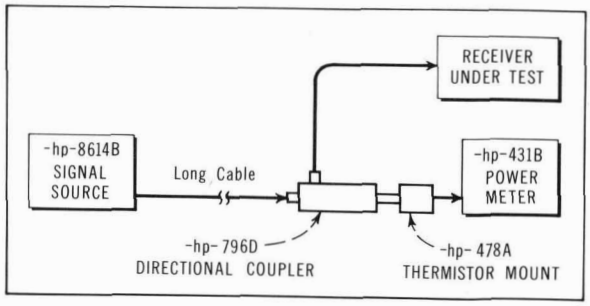

Fig. 5. *Receiver sensitivity measurements uses –hp– Model 796D Directional Coupler to attenuate RF power 20 db below level indicated by power meter connected to main output.*

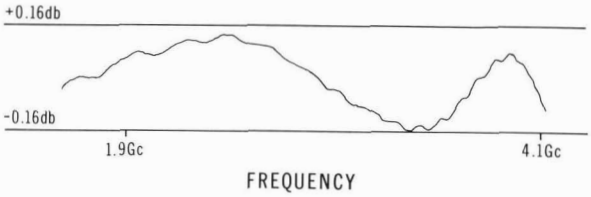

Fig. 6. *Frequency response of typical 787D Directional Detector.*

POWER LEVELING

A Directional Detector can serve as a power take-off for leveling the output of a sweep oscillator, as illustrated by the application shown in Fig. 8. This use of a detector external to the sweep oscillator makes it possible to maintain constant power at some selected point in the external system, regardless of the characteristics of cables, connectors, or other devices between the RF source and the Directional Detector.

If the device at the output of the coupler is poorly matched, the flatness of leveling is influenced by the coupler directivity. For instance, a terminating impedance that has an SWR of 1.5 has 14 db return loss (ratio of incident to reflected power) and this is added to the directivity of the Directional Detector to obtain the ratio of forward to reflected power in the auxiliary arm. If a Model 786D Directional Detector were used, for example, the 30 db directivity of this device would bring the total to a 44 db ratio of incident to reflected power in the

[2] Russell B. Riley, "A New Coaxial Crystal Detector with Extremely Flat Frequency Response," **Hewlett-Packard Journal**, Vol. 15, No. 3, Nov., 1963.

[3] Lawrence Renihan and Robert Prickett, "New Waveguide Crystal Detectors with Flat Response," **Hewlett-Packard Journal**, this issue.

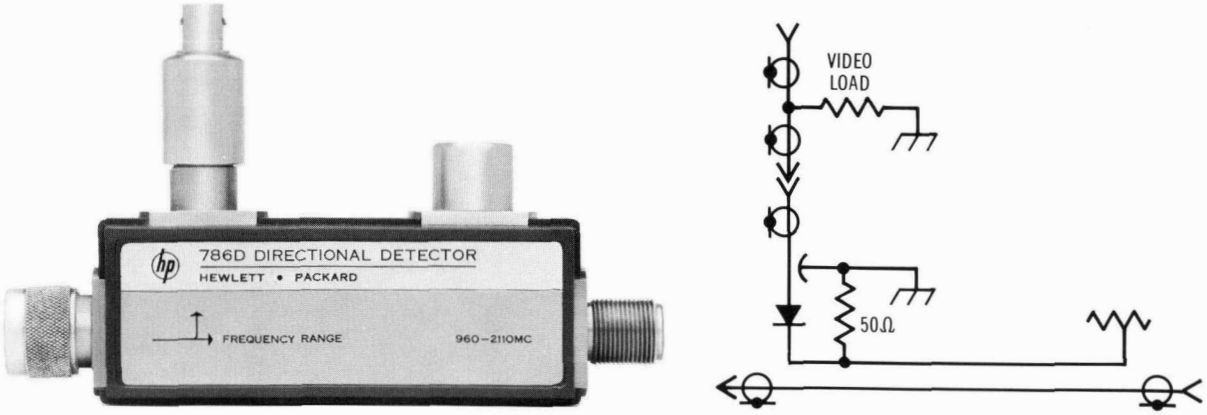

Fig. 7. *Model 786D Directional Detector and equivalent schematic. Diode detector is in sealed capsule easily replaced without special tools.*

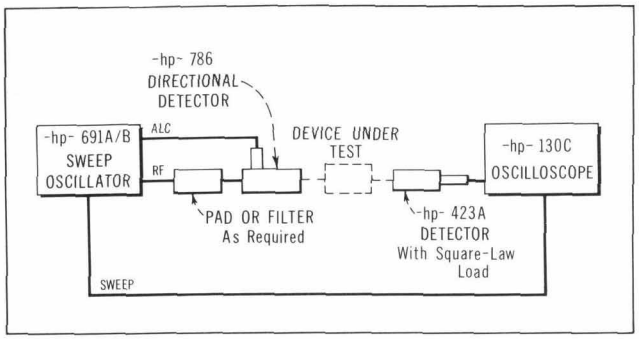

Fig. 8. *Measurement set-up for supplying power in swept frequency measurements. Model 786D Directional Detector senses RF voltage level and supplies corresponding dc voltage to ALC input of sweep generator. Even with a load SWR of 2, power variations at main arm output of detector are less than ±0.5 db.*

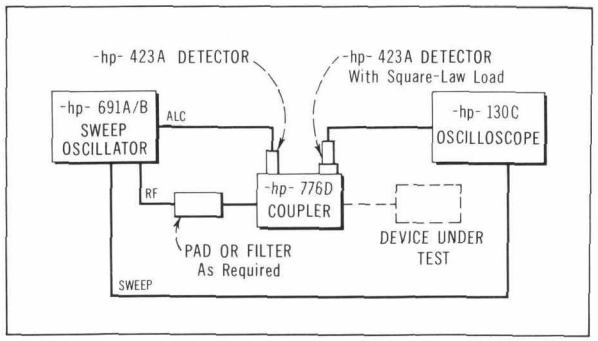

Fig. 9. *Reflectometer system using –hp– Model 776D Dual Directional Coupler. Forward auxiliary arm monitors RF level and supplies feedback signal to level sweep generator. Reverse auxiliary arm monitors reflected RF and supplies vertical signal for scope. Scope is calibrated for SWR by use of zero (short) or infinite (open) impedance loads (for details, see –hp– Application Note 61).*

auxiliary arm. This results in an error of only 0.62% in the voltage at the load. Thus, high directivity in a coupler or directional detector is important for measurement accuracy.

REFLECTOMETERS

A coaxial reflectometer system using one of the new Dual Directional Couplers is shown in Fig. 9. In reflectometer systems, the source of the most significant errors is the finite directivity of the couplers, rather than the frequency response. Since both forward and reverse arms of the new Dual Directional Couplers have identical coupling variations with respect to frequency, the variations are self-cancelling and do not affect the VSWR reading. The frequency response of the forward coupler, which is in the automatic leveling loop, causes the power vs. frequency characteristic of the main line to be "pre-emphasized," thus compensating for the frequency response of the reverse coupler.

The directivity required to prevent addition of significant amounts of forward power to the reflected signals in the reverse coupler, for various values of SWR, is shown in Table I. The directivity of the new Models 774D through 776D is 40

SPECIFICATIONS

–hp– MODELS 796D, 797D, 798C DIRECTIONAL COUPLERS

	796D	797D	798C
FREQUENCY RANGE:	0.96 - 2.11 Gc	1.9 - 4.1 Gc	3.7 - 8.3 Gc
MEAN OUTPUT COUPLING:[1]	20 db ±0.5 db	20 db ±0.5 db	10 db ±0.3 db
OUTPUT COUPLING VARIATION:[2]	±0.2 db	±0.2 db	±0.3 db
DIRECTIVITY:[2]	30 db	26 db	20 db
MAX. PRIMARY LINE SWR:[2]	1.15	1.15	1.20
MAX. SECONDARY LINE SWR:[2]	1.20	1.25	1.20
PRIMARY LINE INSERTION LOSS (including loss due to coupling):	Approx. 0.25 db	Approx. 0.35 db	Approx. 0.6 db
EQUIVALENT SOURCE MATCH:[3]	1.13	1.16	1.25
PRICE:	$200.00	$200.00	$225.00

ALL UNITS:

MAX. INPUT: 50 watts.

PRIMARY LINE CONNECTORS:[4] Precision Type N connectors, one male (input), one female.

SECONDARY LINE CONNECTORS:[4] Precision Type N connector, female.

[1] Difference in db between power out of main and secondary arms.

[2] Swept-frequency tested.

[3] Source match: Apparent SWR at the output of an RF generating system, such as the output of a directional coupler used in a closed loop leveling system.

[4] Other combinations of male and female connectors available on request.

Prices f.o.b. factory.

Data subject to change without notice.

–hp– MODELS 774D, 775D, 776D, 777D DUAL DIRECTIONAL COUPLERS

	774D	775D	776D	777D
FREQUENCY RANGE:	215 - 450 Mc	450 - 940 Mc	.94 - 1.9 Gc	1.9 - 4.0 Gc
MINIMUM DIRECTIVITY:[1]	←	40 db	→	30 db
MAX. COUPLING VARIATION: (50-ohm terminations)	←	±1 db	→	±0.4 db
AUXILIARY ARM TRACKING:[2]	—	—	≤0.3 db	≤0.5 db
MAX. PRIMARY LINE SWR:[1] (50-ohm terminations)	←	1.15	→	1.2
MAX. AUXILIARY ARM SWR: (50-ohm terminations)	←	1.20	→	1.25
PRIMARY LINE INSERTION LOSS:	Approx. 0.15 db	Approx. 0.20 db	Approx. 0.25 db	Approx. 0.6 db
PRICE:	$200.00	$200.00	$200.00	$250.00

ALL UNITS:

COUPLING ATTENUATION (*each secondary arm*): 20 db.

ACCURARY OF COUPLING (each secondary arm): Mean coupling level within 0.5 db of specified values.

POWER HANDLING CAPACITY: 50 watts ave., 10 kw peak.

PRIMARY LINE CONNECTORS: Precision Type N connectors, one male and one female.

AUXILIARY ARM CONNECTORS: Precision Type N female connectors.

ACCESSORIES AVAILABLE: –hp– 11511A Type N Female Shorting Jack, $4.00. –hp– 11512A Type N Male Shorting Plug, $4.50 (for reflectometer calibration).

[1] Measured with HP 906A Sliding Termination or K01-770D Line Length Set.

[2] Maximum change in the coupling curve of one auxiliary arm relative to the other.

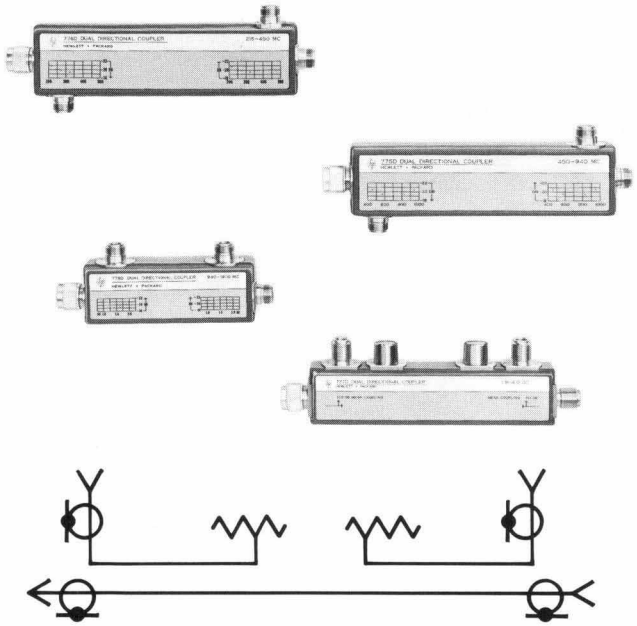

Fig. 10. *Family of new –hp– Dual Directional Couplers and schematic diagram (below). From top to bottom, they are: Models 774D (215–450 Mc), 775D (450–940 Mc), 776D (940–1900 Mc) and 777D (1900–4000 Mc).*

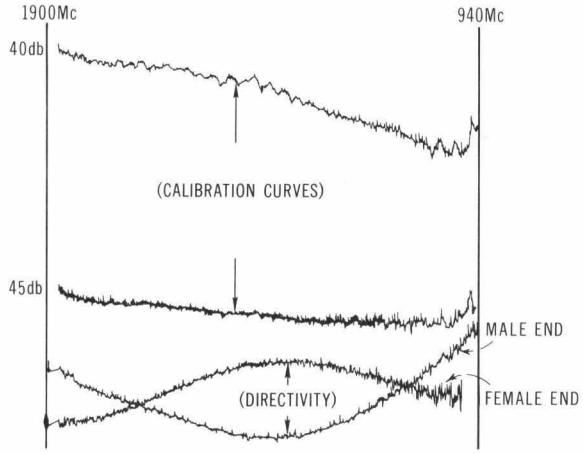

Fig. 11. *Directivity of typical –hp– Model 776D Dual Directional Coupler.*

db, a directivity that results in SWR ambiguities of only 1.02 and that provides an accuracy in reflectometer applications approaching that obtained with time-consuming, point-by-point slotted line measurements. Directivity of the higher frequency Model 777D is 30 db, resulting in SWR ambiguities of less than 1.06.

The two couplers in the Dual Directional Couplers (Fig. 10) are made up of single elements for highest possible directivity and for reduction of transition discontinuities to a minimum. The coupling curve of a single element is of the form k sin βl, so that the coupling varies about 1.3 db across an octave band. The coupling variations of both arms of the new dual directional coupler, of course, are self-cancelling in reflectometer applications.

TABLE I. COUPLER DIRECTIVITY REQUIRED FOR MEASURING A GIVEN SWR

SWR Measured	Coupler Directivity required
>1.10	>30 DB
>1.05	>35 DB
>1.03	>40 DB

MECHANICAL CONSIDERATIONS

All three types of couplers are housed in rigid, cast aluminum bodies (except for the hybrid waveguide types). The precision type-N connectors are of stainless steel for maximum wear resistance in applications requiring frequent connect-disconnect cycles.

(Continued on Page 8)

SPECIFICATIONS

–hp–

MODELS X781A, 786D, 787D, 788C, and 789C DIRECTIONAL DETECTORS

	786D	787D	788C	X781A/789C
FREQUENCY RANGE:	0.96 - 2.11 Gc	1.9 - 4.1 Gc	3.7 - 8.3 Gc	8 - 12.4 Gc
FREQUENCY RESPONSE:[1,2]	±0.2 db	±0.2 db	±0.3 db	±0.5 db
DIRECTIVITY:[1]	30 db	26 db	20 db	17 db
SWR:	1.15[1]	1.15[1]	1.20	X781A: 1.25[1] 789C: 1.4[1]
EQUIVALENT SOURCE MATCH:[1,3]	1.13	1.16	1.25	X781A: 1.07 789C: 1.25
MAXIMUM INPUT: (peak or average)	10 watts	10 watts	1 watt	1 watt
INSERTION LOSS: (including coupling loss)	Approx. 0.25 db	Approx. 0.35 db	Approx. 0.6 db	Approx. 0.7 db
SENSITIVITY LOW LEVEL: (per μw cw)	>4 μv	>4 μv	>40 μv	>20 μv
HIGH LEVEL: (input to produce at least 100 mv output)	35 mw	35 mw	3.5 mw	7 mw
PRICE:	$300.00	$300.00	$325.00	$350.00

ALL UNITS:

DETECTOR OUTPUT IMPEDANCE: 15k ohms max. shunted by approx. 10 pf.

NOISE: 200μv pk-to-pk with CW power applied to produce 100 mv output.

DETECTOR OUTPUT POLARITY: Negative.

DETECTOR OUTPUT CONECTOR: BNC female.

RF CONNECTORS:

X781A — Precision Type N female (input), precision cover flange fits 1 x ½ in. waveguide EIA WR90 (output).

786D, 787D, 788D — Precision Type N, one male (input), one female.

789C — Precision Type N female (both connectors).

OPTIONS:

02. Furnished with load resistor for optimum square law characteristics[2] at 24°C (75°F), < ±0.5 db variation from square law from low level up to 50 mv peak output (working into external load >75k); sensitivity typically >1 μv/μw cw (786D, 787D; >10 μv/μw cw (788C); >5 μv/μw cw (X781A, 789C); add $20.00.

03. Positive polarity detector output, no additional charge.

[1] Swept-frequency tested.

[2] As read on a 416 Ratio Meter or 415 SWR Meter calibrated for square-law detectors.

[3] Source match: apparent SWR at the output of an RF generating system, such as the output of a directional detector in a closed-loop leveling system.

Prices f.o.b. factory.
Data subject to change without notice.

NEW WAVEGUIDE CRYSTAL DETECTORS WITH FLAT RESPONSE

UNTIL recently, accuracy in fast, repetitive microwave swept frequency measurements was limited by the frequency response of available crystal detectors. Frequency response variations of ±2 db across a waveguide band of frequencies were typical of the best crystal detectors formerly available.

Now, a new series of waveguide crystal detectors provides a frequency response that is better than ±0.2 db up to 10 Gc and ± 0.5db up to 18 Gc. High accuracy is now possible in fast, swept-frequency measurements that use oscilloscope display, allowing transmission-loss and SWR to be read directly from the oscilloscope graticule.* With such measurement set-ups, results not only are accurate but they also are fast, enabling on-the-spot evaluation of component adjustments.

Frequency response variations in the new crystal detectors, the *-hp-* 424 Series, are less than ±0.2 db across each waveguide band up to 10 Gc. Across X band (8.2–12.4 Gc), the frequency response variations are less than ±0.3 db and across M and P band (10–18 Gc), less than ±0.5 db. In addition, the response of any two of the new detectors is so nearly identical that selection for matched pairs ordinarily is not necessary, although matched pairs can be selected for the most exacting applications.

The flat frequency response is also advantageous in peak and relative power measurements and for systems using closed-loop power leveling. Furthermore, the new detectors have improved square law characteristics which, along with the flat frequency response, assures accurate measurements throughout the band in reflectometer applications.

* Appropriate scales that can be affixed directly to the CRT are supplied with **Hewlett-Packard** Application Note, No. 61, "Leveled Swept-Frequency Measurements with Oscilloscope Display."

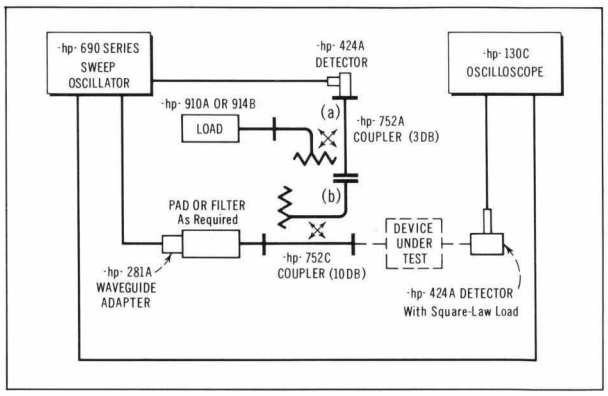

Fig. 1. *Set-up for swept frequency measurements in waveguide achieves flat frequency response with new crystal detectors. Tandem couplers in automatic leveling (ALC) loop assure leveling accuracy commensurate with response of new detectors. Letters on diagram refer to corresponding curves in Fig. 3.*

SWEPT FREQUENCY MEASUREMENTS

Frequency response as flat as that achieved by the new crystal detectors means that other sources of error in measurement set-ups assume increased importance. The dominant source of errors now becomes the inevitable frequency response of the waveguide couplers, and this can be compensated for by appropriate arangement of the couplers. One such arrangement is shown in Fig. 1. Here, the frequency response of the 3-db coupler's main arm is the inverse of the auxiliary arm, as shown by curves "c" and

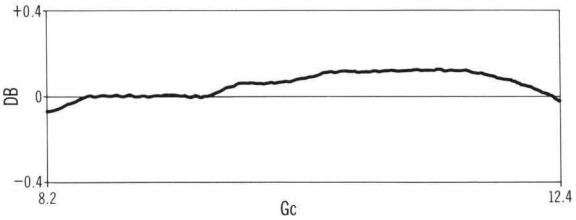

Fig. 2. *Typical frequency response of new -hp- Model X424A Waveguide Crystal Detectors.*

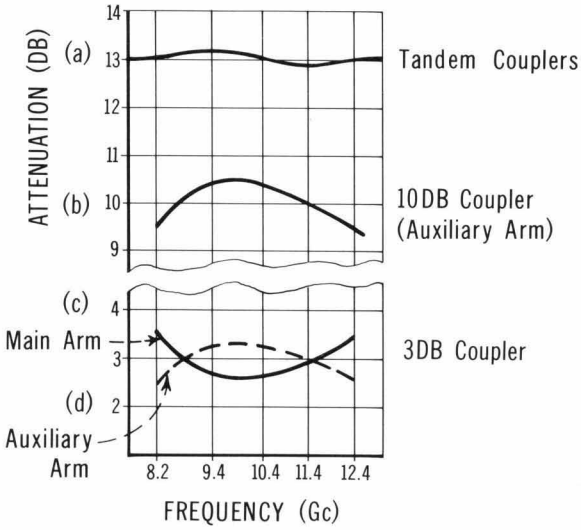

Fig. 3. *Net frequency response (curve "a") of two directional couplers in tandem, as in Fig. 2, varies less than ±0.2 db by mutual compensation of frequency response curves.*

Fig. 4. *Series of seven detectors matches waveguide sizes from S through P bands. Diode elements are in sealed capsules, easily replaced without special tools or soldering.*

"d" of Fig. 3. The 3-db coupler thus compensates for the frequency response of the 10-db coupler and power variations are thereby held to within a few tenths of a db across the band.

Mismatch errors are minimized by use of the new detector with high-quality couplers. An –*hp*– 752C Coupler with a 424A Detector presents a SWR of only 1.05 to the main guide.

DIODE DETECTORS

The flat response of the new waveguide detectors is achieved primarily through use of an –*hp*– developed diode, the same one used in the new Coaxial Crystal Detectors[1] and in the new –*hp*– Directional Detectors.[2] The diode presents a broadband impedance match to a coaxial line by means of a 50-ohm resistive film on the outside surface of the diode cartridge. The point-contact rectifying junction is thus physically close to the terminating resistor and it appears to the coaxial line as a high impedance shunting the resistor. A transition section matches the coaxial section to waveguide; the resulting SWR is less than 1.35 in S through X bands, and less than 1.5 in M and P bands.

Low output resistance and low capacitance combine to give the detectors good pulse characteristics. The detectors therefore are useful

(Continued on Page 8)

[1] Russell B. Riley, "A New Coaxial Crystal Detector with Extremely Flat Frequency Response," **Hewlett-Packard Journal**, Vol. 15, No. 3, Nov. 1963.

[2] Robert Prickett, "New Coaxial Couplers for Reflectometers, Detection and Monitoring," **Hewlett-Packard Journal**, this issue.

Fig. 5. *Optional load resistor is matched to individual detectors for square law conformance within ±0.5 db from low level up to 50 mv peak output (at 24°C). Sensitivity of detector with load resistor is typically 0.1 mv/μw.*

SPECIFICATIONS

–*hp*– MODEL 424A WAVEGUIDE CRYSTAL DETECTORS

Model	Frequency (Gc)	Freq. Resp.* (db)	Sensitivity (into > 75k) Low Level (mv dc μw cw)	Sensitivity (into > 75k) High Level† (mw)	Max. SWR	Fits Waveguide Size Nom. OD (in.)	Fits Waveguide Size (EIA)	Equivalent Flange	Price
S424A	2.6 - 3.95	±0.2	>0.4	<0.35	1.35	3 x 1½	WR 284	UG-53/U	$175.00
G424A	3.95 - 5.85	±0.2	>0.4	<0.35	1.35	2 x 1	WR-187	UG-149A/U	165.00
J424A	5.3 - 8.2	±0.2	>0.4	<0.35	1.35	1½ x ¾	WR 137	UG-344/U	165.00
H424A	7.05 - 10.0	±0.2	>0.4	<0.35	1.35	1¼ x ⅝	WR 112	UG-51/U	155.00
X424A	8.0 - 12.4	±0.3	>0.4	<0.35	1.35	1 x ½	WR 90	UG-39/U	135.00
M424A	10.0 - 15.0	±0.5	>0.3	<0.5	1.5	0.850 x 0.475	WR 75	Cover Flange	250.00
P424A	12.4 - 18.0	±0.5	>0.3	<0.5	1.5	0.702 x 0.391	WR 62	UG-419/U	175.00

FOR ALL MODELS:

OUTPUT IMPEDANCE: 15k max., shunted by approximately 10 pf.

DETECTOR ELEMENT: Supplied.

MAXIMUM INPUT: 100 mw, peak or average.

NOISE: <200 μv pk-pk, with cw power applied to produce 100 mv output.

OUTPUT POLARITY: Negative.

OUTPUT CONNECTOR: BNC female.

OPTIONS:

01. Matched pair. Frequency response characteristics (exclusive of basic sensitivity) track within ±0.2 db for S-, G-, J-, and H-band units, ±0.3 db for X-band units, and ±0.5 db for M- and P-band units. Add $20.00 per unit.

02. Furnished with matched load resistor for optimum square law characteristics at 24°C (75°F),* < ±0.5 db variation from square law from low level up to 50 mv peak output working into external load >75k. Sensitivity typically > 0.1 mv/μw when load resistor is used. Add $20.00.

03. Positive polarity output. No additional charge.

* As read on a 416 Ratio or 415 SWR Meter calibrated for square law detectors.

† Input required to produce 100 mv output.

Prices f.o.b. factory.
Data subject to change without notice.

NEW COAXIAL COUPLERS

(Continued from Page 5)

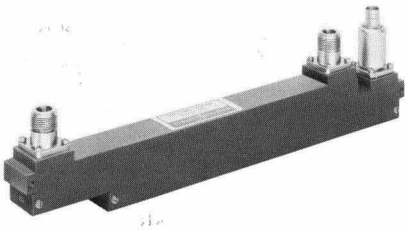

Fig. 12. *Directional Detectors for X-band consist of three waveguide sections with coupling holes between both interfaces. Coupling to bottom section "drains" enough energy to flatten frequency response of directional coupler formed by top and center sections.*

ACKNOWLEDGMENTS

Much of the development work on the Directional Coupler and Directional Detectors was performed by Auber Ryals and Lawrence Renihan. Also, Richard Harmon contributed to the development of the Dual Directional Couplers.

—Robert Prickett

WAVEGUIDE DETECTORS

(Continued from Page 7)

for peak power measurements on short RF pulses, using a sensitive oscilloscope to read the detector output.

Detector sensitivity is greater than 0.4 mv dc per microwatt of CW input power (0.3 mv/μw in M and P bands), a three times improvement over previous waveguide crystal detectors. Uniform square-law response is maintained up to an input power level of —20 dbm (5 mv out). With some sacrifice in sensitivity, square-law response can be obtained over a much wider dynamic range, up to 50 mv peak output, by use of an optional matched video load (Fig. 5).

These new detectors represent an advance in the state of the art of broadband instrumentation and bring new simplicity and accuracy to many microwave measurements.

—Robert Prickett and *Lawrence Renihan*

DESIGN LEADERS

Robert J. Prickett

Bob Prickett joined –hp– in 1957 as an R and D Engineer and since that time has been concerned with the design of a number of –hp– waveguide components, including the 422 K- and R-band Crystal Detectors, the 487 Thermistor Mounts, the 362 Filters, the 752 Couplers, and the 938A and 940A Frequency Doublers. He has been Project Supervisor for the new waveguide Detectors and the new Coaxial Couplers and Directional Detectors.

Bob holds a BE degree from Vanderbilt University and both an EE and MSEE degree from MIT. He is a member of the IEEE and currently is chairman of the San Francisco chapter of the IEEE Group on Microwave Theory and Techniques.

Lawrence Renihan

Larry Renihan, a graduate of the California State Polytechnic College with a BS degree, joined –hp– in 1950. While at –hp–, Larry has been responsible for the design of the K- and R-band Waveguide Probe Carriage (Model 814B), Slotted Line Sections (815 Series), and Slide Screw Tuners (870 Series); also the X930 Waveguide Shorting Switch, the 906A Sliding Coaxial Termination, and the new 424 Series Waveguide Crystal Detectors. He also contributed to the design of the cavities in the Models 626A and 628A SHF Signal Generators.

ATOMIC TIME ADOPTED FOR WWVB

The National Bureau of Standards has announced that the new international unit of time is now being broadcast by NBS Low Frequency Standard Broadcast Station, WWVB. The new time unit, the atomic second, was adopted by the 12th General Conference on Weights and Measures in October 1964 and temporarily defined as the time interval spanned by 9 192 631 770 cycles of the transition frequency between two hyperfine levels of the atom of Cesium 133 undisturbed by external fields. This standard replaces the ephemeris second, adopted in 1956, which was defined as 1/31 355 925.9747 of the time taken by the Earth to orbit the sun during the tropical year 1900.

The new time unit is broadcast on WWVB as once-per-second amplitude-modulated time pulses repeated every 60 kc of the carrier. Accordingly, the WWVB 60-kc/s carrier is now maintained without offset and within a tolerance of $\pm 2 \times 10^{-11}$ with respect to the U. S. Frequency Standard, a cesium-beam resonator.

Although WWVB no longer has the 150 parts in 10^{10} frequency offset that it had during 1964, NBS plans to periodically adjust the WWVB 1-second time pulses so that they are within approximately 0.1 second of UT2, a time scale based on the earth's rotation.

NBS stations WWV, WWVH, and WWVL will continue to be offset -150×10^{10} from the U. S. Frequency Standard during 1965, as they were in 1964, and are thus in close agreement with UT2.

TIME PHASE ADJUSTMENTS

The master clocks at the NBS station were retarded 100 milliseconds (200 milliseconds at WWVB) on 1 Jan 65 because of changes in the speed of the earth's rotation. This adjustment is in accord with an international agreement that synchronizes within 1 millisecond the times of emissions of UT signals from the U. S. and other countries.